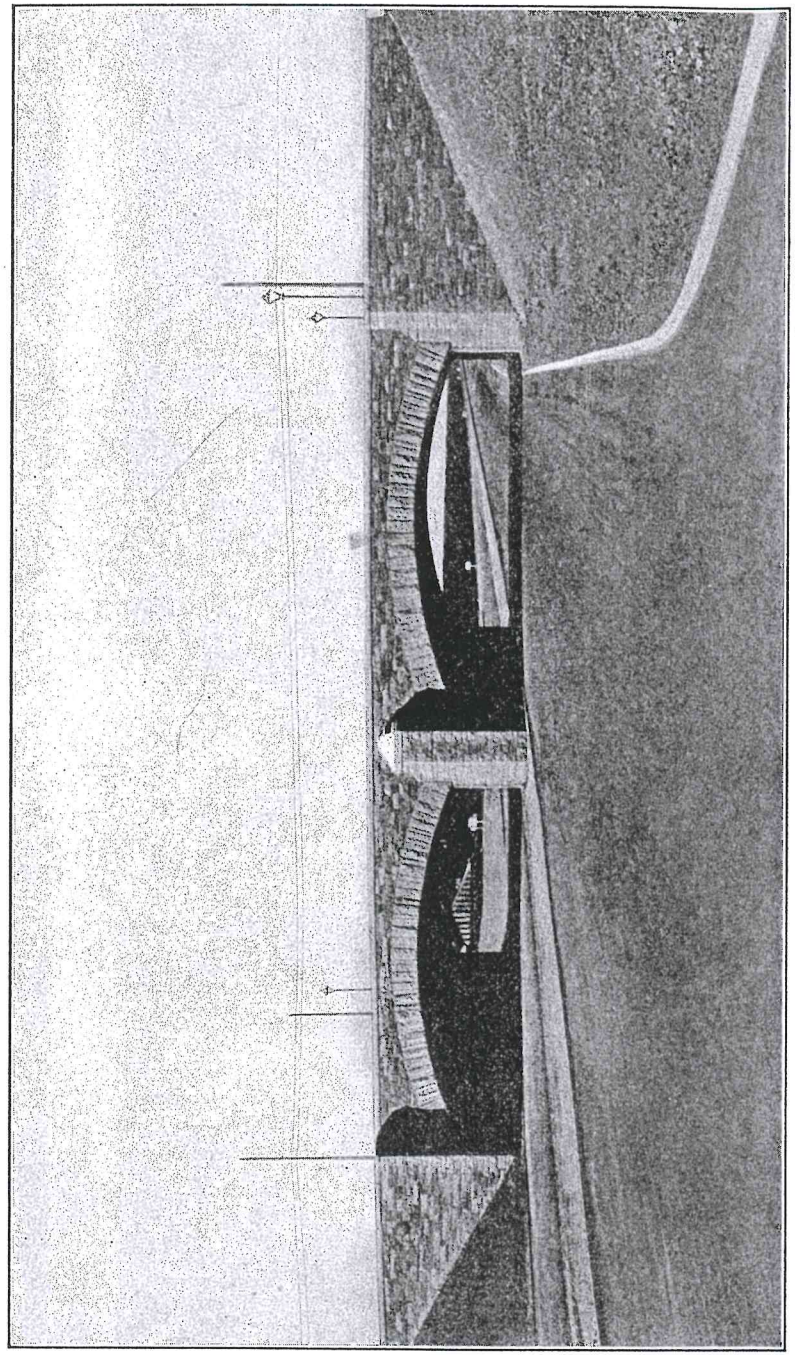

Courtesy U.S. Bureau of Public Roads.

Stone-faced Reinforced-concrete Rigid-frame Bridge, Mount Vernon Memorial Highway, Virginia.

CONTINUOUS FRAMES OF REINFORCED CONCRETE

BY

HARDY CROSS

Professor of Civil Engineering
Yale University

AND

NEWLIN DOLBEY MORGAN

Professor of Architectural Engineering
University of Illinois

PRESENTED TO THE
BRITISH LIBRARY
LENDING DIVISION
-5 DEC 1985
X 6-421

THIRTEENTH PRINTING

1932(1954)

NEW YORK
JOHN WILEY & SONS, INC.
LONDON: CHAPMAN & HALL, LIMITED

COPYRIGHT, 1932
BY HARDY CROSS
AND NEWLIN DOLBEY MORGAN

This book or any part thereof must not be reproduced in any form without the written permission of the publisher.

THIRTEENTH PRINTING, OCTOBER, 1954

Printed in U. S. A.

PREFACE

All structures are designed from experience; the importance of the statement is not diminished by the fact that it needs very judicious interpretation. The object of analysis is to extend the range of experience, to give a correct basis for comparison between the structure that has been built and the structure that is to be built by picturing their relative distortions. Great architects and builders have always drawn these pictures of deformation, must draw them to build; but they have often found difficulty in giving values for the strains and stresses represented.

This text is written in the hope that it may help structural engineers to picture deformations in frames clearly and accurately. The book emphasizes — it can scarcely overemphasize — the importance of these pictures and the elementary nature of the geometry involved in drawing them. In developing the methods used here a conscious effort has been made to utilize the common sense of the profession. If these methods are revised in the future, it will be in the direction of simpler pictures, fewer technical terms, fewer special cases.

This is not a book on design — that should occupy a separate volume — nor is it a general treatise on the mechanics of statically indeterminate structures. It makes no attempt to present all methods of analysis, but adheres closely to a small group of geometrical methods which have been evolved over a period of years to meet the needs of seniors and graduate students, and which many engineers have already found of great value in practical design. Much of the material is new; some of it has been presented by the senior author in various technical publications. Slabs and space frames are excluded. An examination of the table of contents will further indicate the scope.

The title refers specifically to reinforced concrete because most of the problems discussed occur so frequently in that field. Much of the material and all of the methods included are applicable also to structures of steel, but a similar book on that subject would include other problems and would treat many of those here discussed with quite different emphasis.

The fundamental method used is moment distribution and its analogue, shear distribution. Experience at several universities shows that students quickly grasp these methods and hence have time to go on to some discussion of design, of "What are you going to do about it?"

Thus they escape the danger of finishing their study of indeterminate structures without understanding the application of analysis to design — all dressed up intellectually, but not knowing where to go. The column analogy and its corollaries, moment areas and stress areas, are presented as auxiliary tools for determining constants for the individual members in the frames.

Professor F. T. Mavis, of the University of Iowa, very kindly read the original manuscript and both he and Professor Hale Sutherland, of Lehigh University, made valuable suggestions.

H. C.
N. D. M.

URBANA, ILLINOIS
September, 1932.

CONTENTS

CHAPTER I

INTRODUCTION

PAGE
General Considerations on Continuity 1
Physical Constants Involved in Analysis 3
What is E? 4
What is I? 5
Effect of Uncertainties as to Physical Constants 5
Problems in Continuity of Structures of Reinforced Concrete 6
Methods of Analysis 6
Recommended Order of Study 7

CHAPTER II

STATICS OF DEFLECTED STRUCTURES

Importance of Visualizing Deformations 8
Examples of Study Sketching 9
Inflection Points — Load, Shear and Bending Moment 12
Moment Curves on Continuous and Fixed-ended Beams 14
Shears on Continuous Beams 15
"Arch Action" 19
Statics of Bents and Arches 20
Statics of Sidesway 24
Illustrative Problem — Statics of an Irregular Bent 25

CHAPTER III

GEOMETRY OF DEFLECTED STRUCTURES

A. *Geometry of Flexure*

Elements of Geometry of Flexure 26
Application to Reinforced Concrete 27
The Analogy of Angle Loads 28
Moment Areas 30
Stress Areas 31
Illustrations of the Geometry of Flexure 31
Designing for Given Deflections 38
Comparative Deflections 42
Limitation of the Application of Stress Areas to Reinforced Concrete 43
Geometry of Deformation of Frames 45

B. *The Column Analogy*

The Tool and Its Uses 46
The Analogy 48
Unsymmetrical Sections 51

PAGE
The Indeterminate Force 52
Kern Relations 54
Signs of Bending Moments in the Column Analogy 55
Tabulation of Computations in the Column Analogy 56
Choice of Curve of Moments to Use in Applying the Column Analogy 56
Hinges in the Column Analogy 60
Illustrations of the Column Analogy 60

C. Geometry of Influence Lines

The Principle of Virtual Work 77
The Reciprocal Theorem 77
Influence Lines as Deflected Structures 79
Sketching Influence Lines 79

CHAPTER IV

MOMENT DISTRIBUTION

The Effect of Continuity on Bending Moments 81
Moment Distribution a Physical Conception 81

A. Direct Method

Fixed-end Moments, Stiffness and Carry-over Factor 83
The General Method for Prismatic Beams 86
The Effect of Columns in the Analysis 90
Check on Moment Distribution 91
Signs for Moments 92
Arrangement of Computations in the Analysis of Frames 95
Summary of Principles 96
Treating Free-end Members as Such 98
Illustrative Problems 99
Abbreviated Computations in Moment Distribution 103
Distribution of Unbalanced Moment at Separate Joints 104

B. Indirect Method

Fixed-end Moments by Moment Distribution 106
Movement of Joints — Sidesway 107
Problems Involving Sidesway 109

C. Some Applications

Settlement of Supports 115
Torsional Resistance in Frame Analysis 117

D. End-rotation Constant

Moment Distribution Using Constant for End Rotation 118
General Check on Moment Distribution 119
Examples Using the Factor $1/C$ 120
Simple Frames, Symmetrical or Otherwise, Held Against Sway 120
Abbreviated Exact Method 124

CHAPTER V

HAUNCHED BEAMS

PAGE
Object and Effect of Haunching 126
Approximate Effect of Haunching 127
Exact Values by Column Analogy 132
End-rotation Constants for Haunched Beams 135
Illustrative Problems 136
Properties of Haunched Beams and Columns 137
Curves for Haunched Beams 139

CHAPTER VI

CONTINUOUS GIRDERS — MAXIMUM MOMENTS, SHEARS AND REACTIONS

A. Elementary Procedure

Moving Concentrated Loads 157
Use of Influence Lines 159
Design Procedure 159
Types of Loading for Maxima — Uniform Loads 161
Methods of Drawing Curves of Maxima 161
Maximum Column Moments 162
Maximum Shears 163

B. Exact Curves of Maxima

Fixed Points — Relation to Curves of Maxima 165
Construction of Curves of Maximum Moment 167
Curves of Maximum Shears 167

C. Approximate Methods of Moment Distribution

Outline of Approximate Method 169
Comparisons of Exact and Approximate Values 171

D. Illustrative Problems

Moment Distribution — One Span at a Time 173
Illustrative Problem — Approximate Live Load Moment Distribution 174
Example of Modified Arrangement 176
Computations for Curves of Maximum Shears 178
Illustrative Problems 179

E. Curves of Maximum Moments for Standard Cases

Questions Arising in Preparation and Use of Standard Curves 185
Some Blunders in Analyzing Continuous Beams 187
Limitations on Finding Exact Maxima in Building Frames 189

F. Further Short Cuts for Preliminary Design

Effect of Distant Spans 192
Symmetrical Frames 192
Approximate Maxima by Graphics 193

CHAPTER VII

Rigid Frames

A. *Types and Uses*

PAGE
Definition of Terms 197
Types of Rigid Frames 198
Loadings of Rigid Frames 198
Methods of Analysis of Rigid Frames 199
Methods of Design 200

B. *Single-story Bents of One Aisle*

Theory of the Static Arch Applied to Single Bents 201
Pressure Line Due to Wind in an Arched Bent 204
Analysis of Single Bents by the Column Analogy 204
Analysis of Rectangular Bents by Moment Distribution 207
Remarks on Sidesway 209
Arched Bents. Use of False Ties 211

C. *Wind Stresses in Industrial Buildings*

Method of Analysis 214
Distribution of Shears to Members "in Series" and "in Parallel" 217
Stepped Columns 220

D. *Wind Stresses in Multi-story Buildings*

Approximate Analysis 221
Function of Wind Bracing 223
Exact Studies 224
Mezzanine Floors 226
"Exact" Methods Not Exact 227
Exact Analysis by Shear Adjustment 227
Exact Analysis of Wind Stresses 228
Illustrative Problem 232
Deflection of Building Frames 234
Earthquake Stresses 234
Torsion in Building Frames Due to Wind 235
Secondary Effects of Vertical Distortion of Columns 235
Vierendeel Girders 236

E. *Secondary Stresses in Trusses*

Trusses of Reinforced Concrete 238
Computation of Transverse Displacements 238
Fixed-end Moments. Signs for Secondary Stresses 240
Effect of Proportions on Secondary Stresses 240
Abbreviated Computation 242
Effect of Secondary Stresses on Primary Stresses 242
Illustrative Problem 242

F. *"Rigid-frame" Bridges* 244

CHAPTER VIII

Influence Lines

PAGE
What is an Influence Line? — Its Construction 247
Influence Lines for Statically Determinate Beams 248
Combined Influence Lines 249
Influence Lines for Beams Fixed at Ends 254
Influence Lines for Haunched Beams 257
Influence Lines for Continuous Beams 259
Influence Lines for Continuous Viaducts 259
Influence Lines for Arches 263
Influence Lines for Continuous Series of Arches on Slender Piers 267

Graphical Constructions

Centroid, Statical Moments and Products of Inertia of Areas 270
Graphical Determination of Kern Distances 272
Graphical Application of the Column Analogy 273
Graphical Construction of Influence Lines in Arches 275

CHAPTER IX

Right Arches of Reinforced Concrete

A. *Analysis*

Procedure in Analysis 279
Moments Due to Loads — Symmetrical Arches 281
Temperature, Shrinkage, Rib-shortening and Spread of Abutments 282
Quantities to be Computed 283
Moments and Reactions in Unsymmetrical Arches 283
Unsymmetrical Arch 284
Symmetrical Arch 288
Pressure Line Due to Dead Load 288
The Pressure Line Theorem 289
Use of Influence Lines in the Analysis 289
Illustrative Problem 292
Approximate Formulas for Arch Analysis 300

B. *Design*

Choice of Type and Form 307
Thickness of the Arch Ring 308
Shape of the Arch Axis 310
Temperature Effects 311
Design of a Symmetrical Reinforced Concrete Arch 313

C. *Continuous Arches on Elastic Piers*

Analysis of Continuous Arches 316
Recommended Procedure 317
Distribution Constants 319
Illustrative Problem 321

PAGE
Influence Lines for Moments 326
Balancing Thrusts and Moments in Continuous Arch Series 329
Unsymmetrical Arches in Continuous Series 329

D. Effect of Superstructure

Effect of Superstructure on Design 331
Effect of Expansion Joints in the Deck 332

E. Combinations of Girders and Arches

Illustrative Problems — Suggested Studies 336
Combinations of Arches and Rectangular Frames 338

CONTINUOUS FRAMES OF REINFORCED CONCRETE

CHAPTER I

INTRODUCTION

General Considerations on Continuity. Continuity affects very much the moments in a structure and affects appreciably the shears and reactions. It does not require any great amount of mathematics to see that this is true. It is a matter of common observation that, where a beam is rigidly connected to another beam or to a column, bending in one member will produce bending in the others. In structures of reinforced concrete, reinforcing steel must be provided for the forces produced, otherwise cracking will lead to unsightly appearance and possibly to failure of the structure.

In many cases we can sketch the shape taken by the deflected structure, see where cracking might occur, add reinforcing steel to prevent it and be satisfied. If, however, the structure is important and we wish to know accurately how much steel or concrete is needed, we will make a more thorough investigation. But it is important to recognize clearly that we do not want to carry this investigation beyond the point where it will influence the design; we must always remember that what we want is a structure, not merely an analysis.

It is almost necessary to study our subject in the order: methods of analysis; a consideration of physical constants; a consideration of the application of these values to design. But the engineer must often approach the subject in the reverse order; certainly its phases assume importance to him in reverse order. First, what can he do with these analyses; then what value shall he choose for the physical constants; finally how will he analyze it? A difficulty in the past has been that the student approached the matter in the succession of analysis, constants, design. The practical designer was forced to approach the subject in the order of design, constants, analysis. The student became so involved in methods of analysis that he never got far enough to consider the uncertainty of physical constants or the elements of judgment involved in design. The busy designer, knowing well enough what

values he wanted for his design, recognizing quite well the uncertainty of the physical constants, never had time and frequently had little inclination to devote much effort to analysis.

One of the greatest problems in this field, as it has been in all fields of structural work, is to simplify the principles at both ends so as to make it possible for a man to correlate his knowledge. The analysis of a structure for continuity should be less complicated than the determination of anchorage and stirrup spacing under some specifications. Many writers on the subject of reinforced concrete seem to have held a strange philosophy which attempts to substitute exact rules in every detail for the judgment of the designer and builder. Some rules must check judgment, but there is not and will never be any substitute for the sound judgment of the designer. All that we can hope to do is to furnish simple and usable tools of analysis as aids to that judgment. Analysis must be thought of as a guide to judgment, not as a substitute for it.

In the design of an important indeterminate structure, two analyses of the forces and moments are usually needed. The first analysis is necessarily more or less approximate, and it is essential that it be made quickly. The structure designed from this analysis should usually be so near the final structure that the designer can proceed to detailing and to estimates of quantities. A final analysis is needed to check the stresses in the structure as designed.

Of these two analyses the preliminary one requires greater skill. It need not be very precise, but it should not overlook any important factors. The effect of minor variations in proportions and of the less important elements in analysis may be determined in the final analysis.

Analysis of the shears and bending moments in a continuous structure implies knowledge from three sources. First and foremost are the laws of statics; anyone who does not clearly understand these laws and their application to structural analysis is wasting time in attempting to study continuous structures at all. Second are the facts of geometry; these appear in various forms in the literature of indeterminate structures, but always the fundamental geometrical facts are very simple and very familiar. Finally, the properties of the materials enter to some extent into the problem; Hooke's Law is usually assumed, and the moduli of elasticity of the component parts of a structure are involved.

In most problems of determining the moments, shears and reactions, the properties of the material are not very important; the principles involved are nearly all from statics and geometry, matters about which there can be no question. In the design of the structure to resist these forces we are, of course, concerned very largely with the properties of the materials. If we can accurately picture the deformation of the

structure under load, we can analyze it by statics alone. The methods of analysis serve to make this picture accurate; but unless, after we have analyzed a structure, we can draw its deflected shape, we do not know what we are talking about. Moreover, the exact analysis is no more scientific — though it is more exact — than is the elementary process of drawing a consistent picture of the deformed structure by sketching.

No indeterminate analysis — no structural analysis of any kind — is complete until the computer has satisfied himself:

(1) That the forces balance, at least within the accuracy of computation used.
(2) That he has not overlooked any forces.

Physical Constants Involved in Analysis. An important field of study is that of the sensitiveness of the structure to variations in the properties of the materials or to other underlying assumptions. All analyses are based on some assumptions which are not quite in accordance with the facts. From this, however, it does not follow that the conclusions of the analysis are not very close to the facts.

Three sets of elementary physical constants are involved in the geometric relations used in the analysis of continuous structures. These are: the change of length, per unit of force per unit of length, in members subject to axial forces; the rotation, per unit of moment per unit of length, in members subject to bending moments; the rotation, per unit of torque per unit of length, in members subject to torsion. Probably these constants should have some special name, although none has ever been assigned to them. Perhaps " constants of deformation " is as good a term as any.

Understand clearly that these are actual deformations which occur in the structure under the conditions which we are discussing. It will be found in reinforced concrete that they are not invariable for a given member. The rotation, in a given length of concrete beam subject to a given bending moment, per unit of length per unit of moment, will vary with the dimensions of the section, but it will also vary with the magnitude of the moment and with the duration of the moment. This makes it a rather complicated quantity to deal with. These variations are not small. In a given beam of reinforced concrete we may reasonably expect that if the rotation per unit of length per unit of moment is a for a small moment, it may be $2a$ for a large moment. These values may be doubled if the moment persists for one year, and will increase for any duration of loading.

Fortunately, it is usually the relative values of these deformation

constants, not their absolute values, which are needed. If, however, we wish to find the moments for a definite displacement produced by shrinkage, by change of temperature, or by movement of abutments, we need to know the absolute values.

What is the value of E to be used? What is the value of I to be used? The very definite answer to these questions is that we do not know enough to assign very definite values. The exact values of I, the exact values of E are subject to great variation and are to no small extent a matter of chance. We can only investigate the probable effect on the design of such variations as may reasonably be expected and choose such values as will give conservative design. There is nothing unique in this situation. It occurs in practically all engineering design.

Reference to the elementary geometry presented in Chapter III will show that what we are dealing with in structures of reinforced concrete, is not E or I at all; the quantity with which we are dealing is the rotation per unit of moment per unit of length which exists in the structure in question under the loading conditions in question and for the duration of load being considered. I is simply a myth here.

The whole subject of the values to be used for E and especially for I is at present highly controversial. Space does not permit a review of current investigations along these lines, and the discussion here is restricted to very brief statements of the problems involved and of what seem to the authors the most reasonable conclusions.

What is E? At one time it was thought that the modulus of elasticity of concrete at rupture varied approximately with the ultimate compressive strength, and present codes and specifications are based on this view. There is, no doubt, some relation between the two values, but it is by no means consistent. The value of E varies in what at present seems to be an erratic way over a range from 2,000,000 lb. per sq. in. to 4,000,000 lb. per sq. in. Occasionally values as low as 1,500,000 and as high as 5,000,000 may be found, but in general we may expect the variations to be limited to $\pm 33\ 1/3\%$ from a mean value of 3,000,000.*

This is the value at rupture. But the ratio of stress intensity to strain varies both with the intensity of stress and also with the duration of the stress. The authors see no reason to think that either variation affects seriously the moments produced by loads on the structure, but on this point also there is some difference of opinion.†

* See "Reinforced Concrete Columns in Flexure," Hardy Cross, Proc. A.C.I., Vol. XXVI (1930); also discussion by N. H. Roy and F. E. Richart, and that by W. M. Dunagan.

† See "Flow of Concrete Under the Action of Sustained Loads," Hardy Cross, Jour. A.C.I., December, 1931.

We have as elements in the problem the ordinary, long-recognized variation of the modulus of elasticity, uncertainties as to the distribution of stresses on plane sections in T-beams and in other cases, uncertainties as to the location and effect of local cracking, and uncertainties introduced by the effect of time yield. We have elements of uncertainty, then, as to the exact mechanics of internal stress, we have elements of chance, and we have variation in the properties of the material with time and with stress intensity. The problem of analysis of a continuous structure now seems somewhat hopeless. The statement frequently made that structures of reinforced concrete are not truly elastic in the sense that they do not have complete elastic recovery is perfectly true and entirely immaterial. But the fact that structures of reinforced concrete are not truly elastic in the sense that we cannot predict with accuracy and certainty the exact angle change per unit of moment per unit of length from one section to another of a beam is also true and is very pertinent.

What is I? Various values have been suggested for I. For rectangular sections some use the moment of inertia of the full transformed section, some neglect the reinforcement and use $1/12A_cd^2$, where A_c is the total area of concrete and d is the full depth. Some have suggested $1/12A_cd^{1.5}$.

It will be seen later that the exact value is not very important, and hence many approximations may legitimately be used. The authors recommend the moment of inertia of the full transformed section as the most satisfactory standard.

The greatest uncertainty arises in determining the value of I to use for beam and slab construction. Some use the moment of inertia of the full transformed section consisting of the beam and the connecting slab for a width extending halfway to the next parallel beams. This seems the most satisfactory treatment and is recommended. Many variations have been suggested, however.

Effect of Uncertainties as to Physical Constants. The effect of the girders on the columns is much greater than the effect of the columns on the girders. Moments in the girders are the sum of fixed-end moments and distributed moments as explained later. Fixed-end moments, though subject to some uncertainty, are quite definitely known. The column simply affects the distribution of the unbalanced moment and this unbalanced moment is only a part, and often a small part, of the total moment in the member. But in general, the column has no transverse load and no fixed-end moment and the only moment in it is the distributed moment which comes to it as an effect of loading the girder. There is good reason to believe that the moments produced by loads on

the girders can be determined with reasonable accuracy, but there seems equally good reason to doubt whether the moments in the columns can be determined with much accuracy. Nevertheless an effort should be made to include the column effects in the analysis.*

Problems in Continuity of Structures of Reinforced Concrete. The most common problem in the design of continuous structures of reinforced concrete is to find the curves of maximum moments and sometimes of maximum shears on a series of continuous girders, usually rigidly connected to columns, for dead load and for live load uniformly distributed and applied to the girders either directly or through joists or floor beams equally spaced.

Commonly the girders and columns are of uniform section for their full length except as this is necessarily modified by the existence of the joint. Sometimes the girder sections are varied by end haunches, which may be either straight or curved.

For bridges it is usually necessary to make analyses for moving systems of concentrated loads.

Wind stresses in buildings are usually determined by approximate methods, but there is at present an increasing interest in more " exact " analyses.

The design of arches of reinforced concrete is a problem of a different order from those just outlined. It is not difficult, but it requires a good deal of sound judgment. The analysis of continuous arches on slender piers is a special problem.

Continuous slabs are so distinct a field of study that they have not been discussed in this volume.

Methods of Analysis. The chief methods of thought used in the book are the methods of the deflected structure and of pressure lines in Chapter II, the method of moment distribution in Chapter IV and later of distribution of shears in Chapter VII. The column analogy is used in Chapters III, V, VII and IX. Influence lines are treated in Chapter VIII. The relative importance of these methods is probably in the order given.

These tools are in themselves not very productive; their usefulness depends on the skill and resourcefulness of the man who uses them. Too many students of indeterminate structures hope to progress by acquiring an endless variety of tools and are so busy doing this that they never learn how to use them.

The ability of a designer of continuous structures is measured chiefly by his ability to visualize the deformation of the structure under load.

* See "Continuity as a Factor in Reinforced Concrete Design," Hardy Cross, Proc. A.C.I., Vol. XXV.

If he cannot form a rough picture of these deformations when he begins the analysis he will probably analyze the structure in some very awkward and difficult way; if he cannot picture these deformations after he has made the analysis, he doesn't know what he is talking about. The more or less gentle reader may find the constant repetition of this theme monotonous, but it is the deliberate conclusion of the authors that the most important aspect of the subject is the simple picture of structural deformation.

Recommended Order of Study. The following order of study is suggested to independent students of the subject. Although it reverses some of the logical steps in demonstration, it gives results rapidly. An experienced teacher will vary the procedure because he will be able to explain the bearing of theory on design and of design on the relative importance of various steps in analysis.

It is assumed that the student is quite familiar with statics and reasonably familiar with the routine procedure of reinforced-concrete design. Even such students may find Chapter II on statics of interest.

(1) Learn the elementary process of moment distribution, Chapter IV, accepting its theorems temporarily as proved. Practice simple moment distribution restricted to frames made up of members of constant section and apply it. Then learn to balance the shears for sidesway by methods explained in Chapter VII.

(2) Draw many curves of maximum moments for uniform loads, using different span arrangements, different relative stiffnesses of columns and girders, different ratios of live to dead load. (See Chapter VI.) Use merely the elementary procedure of constructing the curves of moment for individual spans loaded and combining as indicated for maxima.

(3) Make similar studies for maximum end shears.

(4) Run through the approximate design of several of these structures with a view to observing the effect of continuity on the design.

(5) Haunch the beams in some of these problems, using the approximate methods of treating haunches and the curves given in Chapter V, and observe the effect of the haunches on the design.

(6) Proceed to a careful study of the geometry on which the whole procedure is based, the geometry of flexure. Chapter III.

(7) Consider the uncertainties of physical data involved in the analysis as indicated in this chapter and elsewhere.

(8) Proceed to exact studies of sidesway and of stresses in general produced by transverse loads. Chapter VII.

(9) Study arches and other special problems. Chapter IX and elsewhere.

CHAPTER II

STATICS OF DEFLECTED STRUCTURES

In this and in the next chapter the tools of analysis are exhibited and their use is explained. First place is given to the procedure of visualizing the shape taken by the deflected structure under load. This cannot be overemphasized.

Next we take up the statics of indeterminate structures. Students familiar with statics but not with its application to indeterminate structures overlook many of its important implications in this field, some of which amount almost to independent theorems.

Importance of Visualizing Deformations. One of the first objects of the analysis of indeterminate structures is to see how the structure deforms. If the analysis fails to give the designer a clear mental picture of the action of the structure under load, it is dangerous to proceed with the design. This is especially true of reinforced-concrete structures where bars are often placed on only one side of a section; flexure which produces tension on the other face may cause failure.

It is possible by training, by simple crude models, and by computation, to develop imagination in visualizing the function of each part of a structure in resisting the load. It is then possible to sketch directly the shape of the deformed structure. If this can be accurately done, the forces, moments and shears can all be computed by statics. This procedure is scientific in principle but, of course, lacks precision. It is always the first thing to be tried in designing a new type of structure, and it is the last thing that should be done in all cases after an analysis has been made, in order to give meaning to the computations. Many times the results obtained from sketching the deformed structure, though somewhat lacking in precision, will be sufficiently accurate to satisfy the needs of the designer.

What is eruditely called the theory of elasticity deals with the simple fact that, if a structure does not break, it holds together. The word "theory" here is used in the sense of an assembly of systematically arranged facts and not in the sense of scientific hypothesis. Practically all of what constitutes the theory of elasticity — it might better be called the theory of continuity — is simply a statement of certain geometrical relations which must exist in order to have continuity preserved. The relations between the forces and the deformations are based on

certain assumptions, which may be open to debate, as to properties of materials. The geometrical relations themselves are open to no debate.

The best method of analyzing most indeterminate structures is to find the forces which would exist under a simple condition of restraint and then to determine the effect of removal of the restraint. This is true in picturing the deformation of the structure, and it is usually true in devising a mathematical procedure for exact analysis.

Examples of Study Sketching. Consider a fixed-ended beam with a moment load applied at its center as shown in Fig. 1. It is obvious

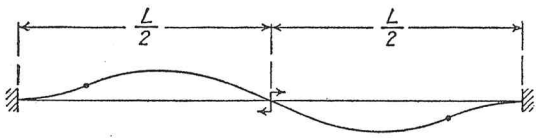

FIG. 1. Deformation of a Fixed-ended Beam — Moment Load at Center.

that the axis of the beam will be turned at the center in the direction of the moment. Moreover, there will be no deflection at the center because of symmetry, for if the forces on the right caused a downward deflection of the center, the forces on the left would cause an equal, but contrary, upward deflection. Since there is no deflection at the center and since the axis must remain horizontal at the ends, the curve of

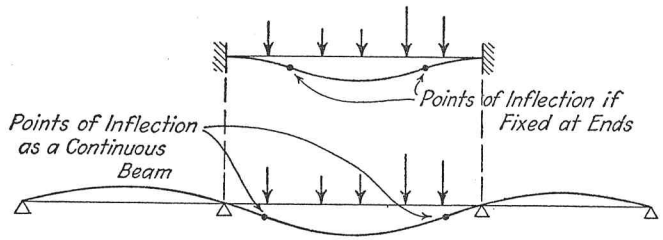

FIG. 2. Deformation of a Fixed-ended Beam and of a Continuous Beam.

deflection shown in the figure may be drawn, having one point of inflection on each side of the load.

This method of studying the problem is powerful and leads directly to a sufficiently accurate solution of the problem by statics.

In the case of a continuous beam, there is at the ends of a loaded span an obvious tendency to rotate the axis since the beam "tries" to straighten out at that point. We can sketch the deflected fixed-ended beam and, by modifying this, visualize the deformation of a continuous beam. This is done in Fig. 2.

After a little practice it is not difficult to sketch the simple cases of deformed structures.

In Fig. 3 (*a*) is shown a symmetrical rectangular bent, subject to transverse load. If the girder is very stiff it does not bend appreciably. It is easy to see that the columns are deflected sidewise, remain vertical at the top and at the bottom, and hence are symmetrically bent, and have their points of inflection at the middle. From this a statical solution follows as indicated in (*b*).

If the girder is not extremely stiff, it will bend at each end as shown in (*c*). Considerations of symmetry indicate that the point of inflection of the girder is at its midpoint, and a study of the sketch will show that the points of inflection in the columns have moved up above the center.

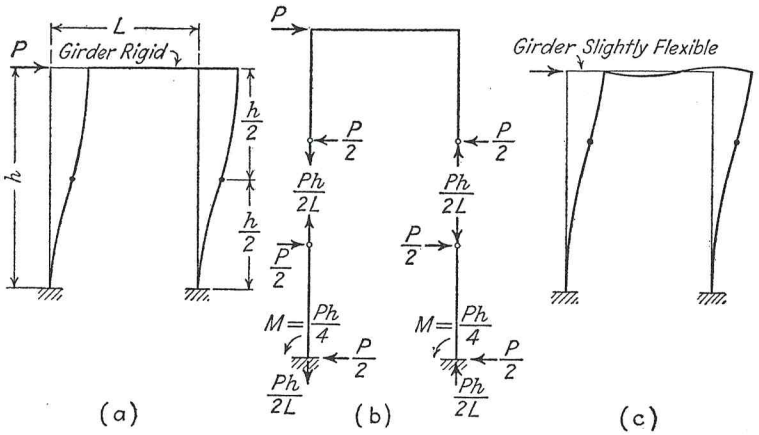

FIG. 3. Deformation of a Symmetrical Bent.

Obviously, if the girder were absolutely flexible, this would be equivalent to hinge connections at the tops of the columns, and the points of inflection would rise to the top. Similarly, if the foundation rotates owing to the reactions, the point of inflection in the column will move down, and as a limit will be at the bottom of the column when perfect freedom of rotation exists.

This sort of study may seem extremely elementary, but it will produce quite as satisfactory results in many cases as will elaborate analysis. Most rectangular bents do not justify much mathematical analysis because the degree of fixation of the foundation is almost invariably uncertain. We can only strike a balance between the influences tending to raise and to lower the point of inflection in the column.

As another simple illustration, consider a beam fixed at the ends and

carrying a concentrated load (Fig. 4). Evidently the beam deflects down under the load; evidently it must curve back up to its supports and become horizontal there. It has the shape shown in the figure.

FIG. 4. Deformation of a Fixed-ended Beam — Concentrated Load.

A rectangular bent is loaded with a concentrated transverse load, Fig. 5. If the girder is stiff and is restrained from moving horizontally, the deformation will be as shown by the line noted on the left. Sidelurch tends to raise the points of inflection in the loaded column. We can approximate the shape of the deformed structure as shown in the

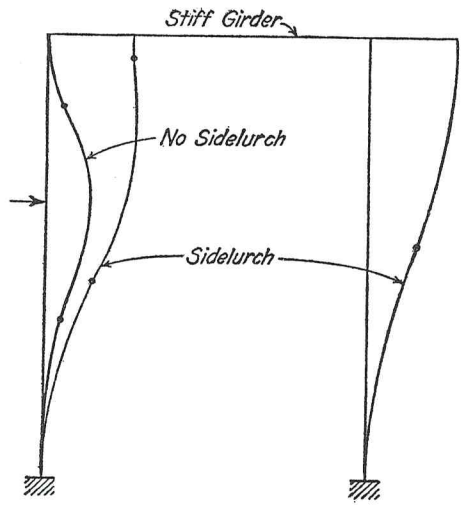

FIG. 5. Deformation of a Rectangular Bent.

figure. Note, however, that the upper point of inflection on the loaded column may move out of the column entirely and into the girder, and usually does so. But it is scarcely possible to see by inspection just what the final position is.

Other examples of sketching the deflected structure are indicated in Fig. 6.

The student should not imagine that he can always do this without any computation — no one can — nor should he rely too implicitly in his ability to do it. The important thing is that it is very well worth

practicing, and that, unless an analysis enables one to picture these deformations, it is a snare and a delusion.

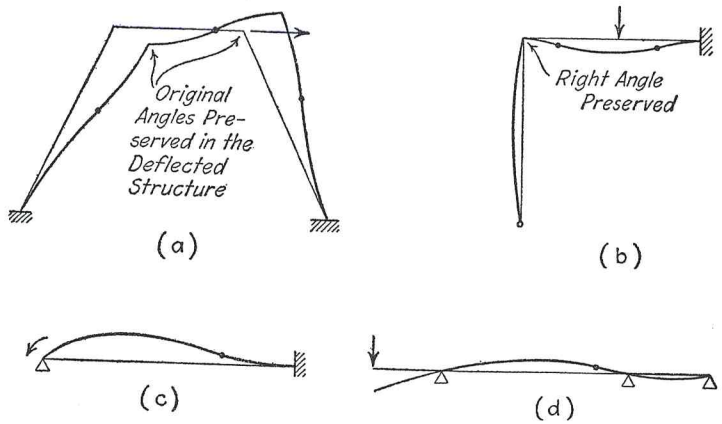

FIG. 6. Sketched Deformation of Loaded Structures.

Statical Relations. Inflection Points. The principle of statics states that, when a structure or any part of a structure is at rest or in uniform motion, there is no unbalanced force acting on it. This principle is usually separated into three parts, and we state that the three statical limitations are

$$\Sigma H = 0, \qquad \Sigma V = 0, \qquad \Sigma M = 0$$

This enables us to distinguish the components in each of two directions and the location of the force.

In space it is convenient to separate the law into six constituent relations:

$$\Sigma X = 0, \ \Sigma Y = 0, \ \Sigma Z = 0, \ \Sigma M_x = 0, \ \Sigma M_y = 0, \ \Sigma M_z = 0$$

Some of the consequences of the principles of statics commonly indicated in texts on mechanics become of peculiar significance and importance in designing indeterminate structures.

Points of inflection are points of zero moment. This is merely a truism, since it states that, if at any given section a beam is not bent, there is no tendency to bend it, and of course it is not bent where its direction of flexure changes.

Relations Between Load, Shear and Bending Moment. The principle of statics teaches us that the rate of change in the moment along any line is the shear on sections normal to the line — the differential of the moment is the transverse shear. This principle should be visualized as well as remembered. It means simply that, since the shear is the

sum of the forces and the moment is the sum of the forces times their distances, if we move a small distance the moment will be increased by the shear times the distance. Also the rate of change of the shear is the intensity of load per foot, which follows from the fact that the shear is simply the sum of the loads.

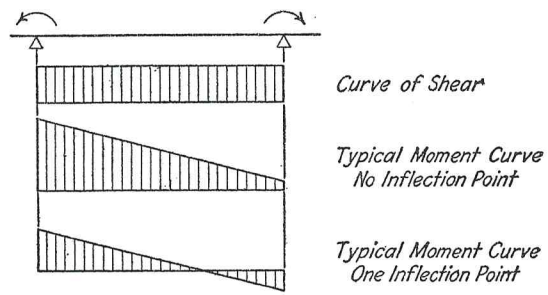

FIG. 7. Shears and Moments on Unloaded Span of Continuous Beam.

From this it follows that, if there are no loads on a beam, the shear across the beam is constant and the moment curve is a straight line. Consequently, if there are no loads on a straight beam, there is either one point of inflection or no point of inflection. This is shown in Fig. 7.

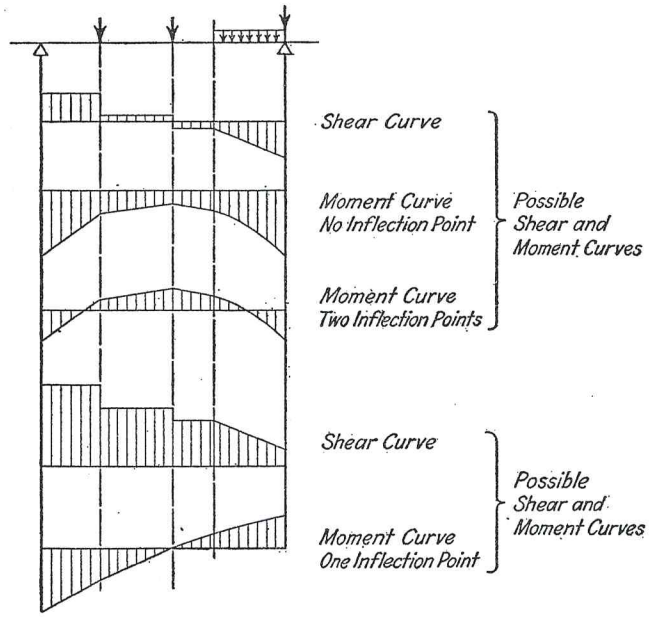

FIG. 8. Shears and Moments on Loaded Span of Continuous Beam.

If the loads on any span are all in the same direction — up or down — the shear in that span either has the same sign at all points or changes sign at one point on the span. Consequently the moment curve either

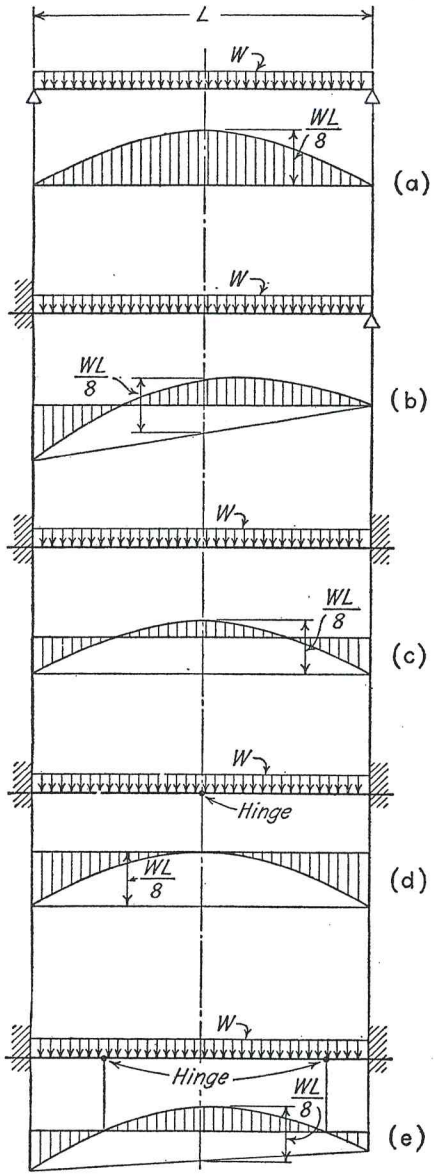

FIG. 9. Effect of Hinges and Restrained Ends on Curves of Bending Moment.

slopes continuously in one direction or changes direction of slope at one point. It may then pass through zero at no point, or at one, or at two points on the beam as illustrated in Fig. 8.

Moment Curves on Continuous and Fixed-ended Beams. A loaded beam which is continuous differs from one which is simply supported in that it has bending moments at its ends. The shears and moments can be conveniently separated into those which would exist if the beam were simply supported and those which are a consequence of the end moments. The curve of moments is the sum of the moments on a simply supported beam for the given loads and the moment curve on a beam having the terminal moments. As explained above, this latter moment curve is a straight line. The construction is illustrated later in Fig. 11.

The moment diagrams on spans with restrained ends may thus be thought of as the moment curves of corresponding simple beams constructed on new base lines, the position of the base line being fixed by the conditions of restraint.

This is illustrated in Fig. 9, where the parabola due to uniform loading on a simple beam in (*a*) is modified in the other figures to satisfy the various conditions imposed. If the points of inflection are known we can draw the whole moment curve by making the curve of moments which would exist if the beam were simply supported pass through these points of inflection.

Shears on Continuous Beams. In the same way the shears on a continuous beam can be determined as the sum of those which would exist if the beam were simply supported and the shears due to terminal moments. See Fig. 10. Terminal moments will be resisted by a couple produced by equal and opposite end shears, having values equal to the arithmetical difference of the terminal moments divided by the span

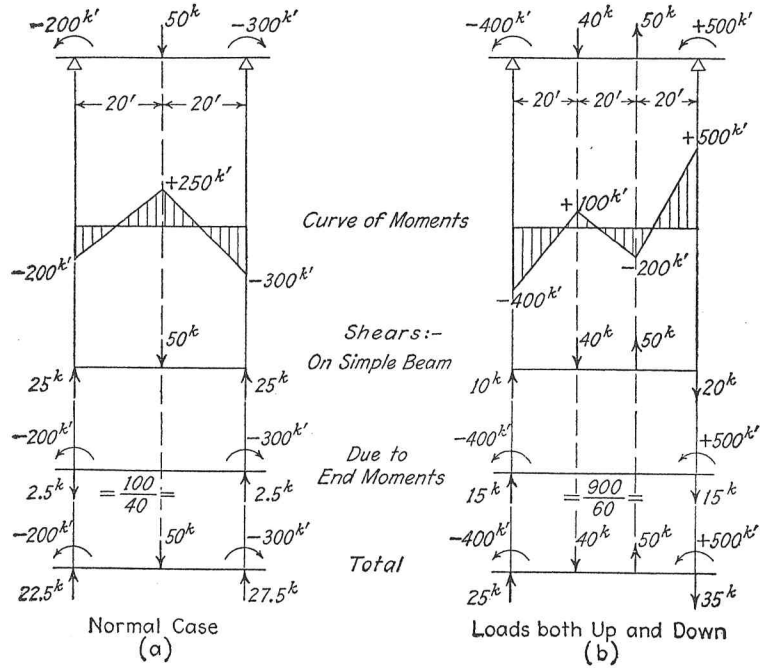

FIG. 10. Statics of Continuous Beams.

length. If we use the usual conventions of signs for bending moment — positive moments sag the beam and negative moments hump the beam — it is easy to see, without bothering about mathematical conventions, that if the beam is humped at both ends by the terminal moments they are opposing each other, and also that the normal shear — positive at the left end and negative at the right end — will be increased at that end of the beam at which the negative moment is the greater.

This deals with the ordinary case of gravity loading. In other cases it is a simple matter to sketch the beam and see at once the relations of signs involved. In Fig. 10 two simple examples of this kind are shown.

At any support, the reaction is the sum of the two end shears plus any load immediately over the support.

Illustration of Curves of Shear and Moment. An illustration of the construction of moment and shear diagrams as a combination of the simple beam curve and the diagram due to the end moments is shown in Fig. 11.

The end moments on the span have been determined as $-30^{k'}$ and $-90^{k'}$. The curve of moments is the difference between the simple beam

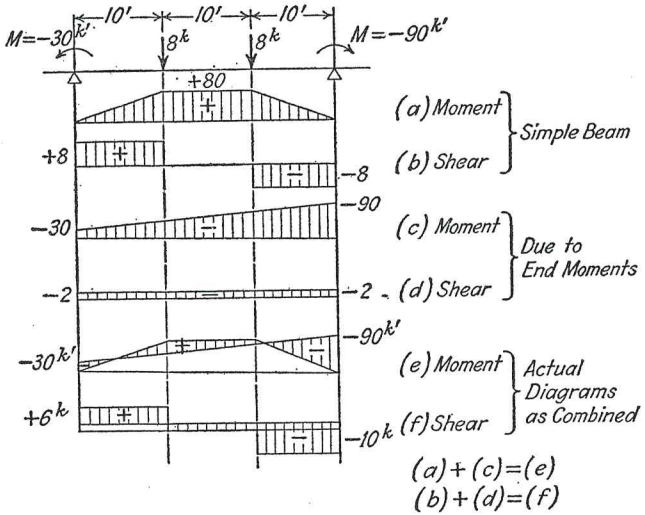

FIG. 11. Combined Curves of Moments and Shears.

moment diagram and the trapezoidal diagram due to end moments as shown in (*e*).

The unbalanced end moment $-(90 - 30) = -60^{k'}$ is in equilibrium with a couple due to a change in reactions: an increase on the right, where the greater negative moment occurs, and a decrease on the left. The change in shear is then $-60/30 = -2^{k}$, giving the combined shear diagram shown in (*f*).

Inflection Points. This conception of the moment curve as made up of two parts, one due to the loads acting on the simple beam and the other due to the end moments, indicates at once that in loaded spans there will usually be two inflection points or none at all (though there may in some cases be one), whereas in unloaded spans there will be either one inflection point or none at all. It will be further seen that the points of inflection in loaded spans will change with any variation in the loading conditions which affects the end moments.

Study of the inflection points in continuous beams indicates another useful viewpoint. Since the inflection points are points of zero moment, they may be thought of as temporary hinges, and the continuous beam may then be analyzed by statics as a cantilever structure.

For the moment curve shown in the continuous girder *AF*, Fig. 12, *AB* is a simple span, *BC* is a balanced cantilever, *CD* is a simple span, *DE* is a balanced cantilever, and *EF* is a simple span. The treatment of the continuous girder differs from the cantilever structure only in this respect, that, whereas in the latter the hinges are definitely fixed, in the former the points of zero moment change with the condition of

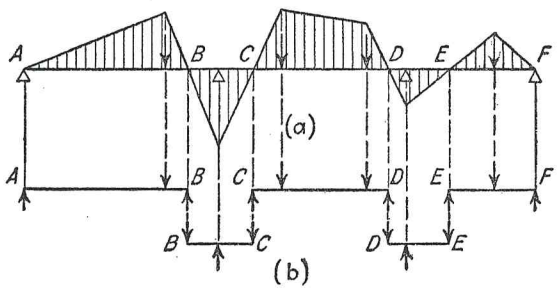

FIG. 12. Continuous Beam as a Cantilever Structure.

loading. If the location of the inflection points is known, the shears and moments are readily computed by statics as may be seen in (*b*).

The significance of the inflection points in finding the shears and reactions is further illustrated in the construction shown in Fig. 13. In (*a*) the center span is uniformly loaded, and the loaded lengths which may be used to compute the end shears are indicated. Similar construction is shown in (*b*) for the case of uniform load on the two end spans, and in (*c*) the length of load producing the two center reactions is shown for the condition of uniform load on all spans.

It is important to realize clearly as early as possible in the study of continuous structures that the deflected structure is not merely a distorted figure somewhat like the real deformed structure. An accurate sketch of the deflected structure will conform in every way to the curve of static moments deduced from it. This means that the points of inflection indicated by the deflected structure are points of zero moment, and that to the pressure line* drawn through them the sharpness of curvature at points of the deflected structure must correspond, the

* Some familiarity with the pressure line is assumed. It is a broken (or curved) line made up of the successive resultants of the reactions and loads acting on the structure. See page 22 and Chapters VII and IX.

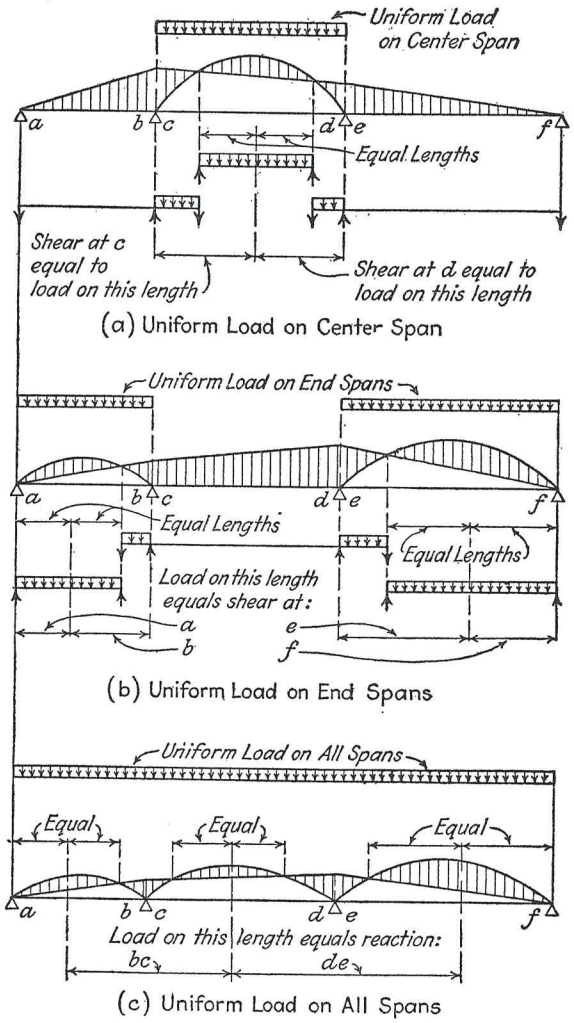

FIG. 13. Continuous Beams as Cantilever Structures.

curvature being proportional to M/I at any point. If these requirements are satisfied exactly, the solution is correct both by statics and by geometry; we have an exact analysis.

Exact analyses by sketching the deflected structure are not practicable, but a little training will develop ability to detect at once glaring in-

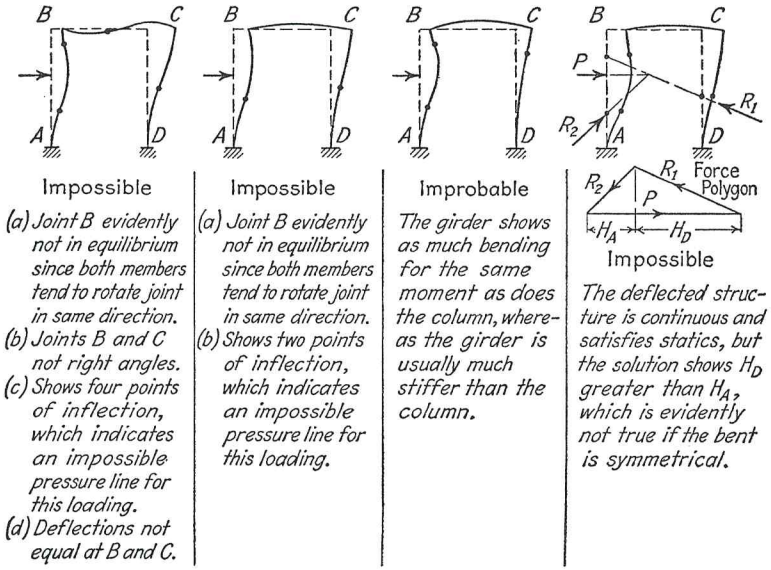

FIG. 14. Incorrect Sketches of Deflected Symmetrical Bent.

consistencies. Fig. 14 shows some incorrect sketches with notes on them.

"Arch Action." In the study of bents and frames, particularly where curved girders have been used, the term "arch action"* is sometimes employed with confusion and even misrepresentation. Except where it describes an architectural type, it is probably better to avoid the term "arch." Where the term is employed we must define exactly what reactions are indicated and identify the abutments that resist the thrust.

For example, consider the multi-storied building shown in Fig. 15 with floors of slab and beam or of flat slab construction. It might be assumed that each of these bents acts as an arch and consequently has its moments reduced by the horizontal reaction which exists in an arch.

* The term "catenary action" is used by some writers with the same feeling of mystery. The method of reasoning used here in reference to "arch action" applies also to "catenary action."

It will at once be seen that, if thrusts exist in all girders, an impossible shear accumulates in the wall columns.

Moreover, if any reasonable values for moment and thrust are assumed in the girders and the inflection points in the columns determined by statics, it will be found that these points jump around in a most mysterious and improbable fashion as we pass from story to story. As a matter of fact, arch action could not be depended upon in such a case. The girder might be subject to pushes or to pulls depending upon the condition of restraint and upon the arrangements of loads.

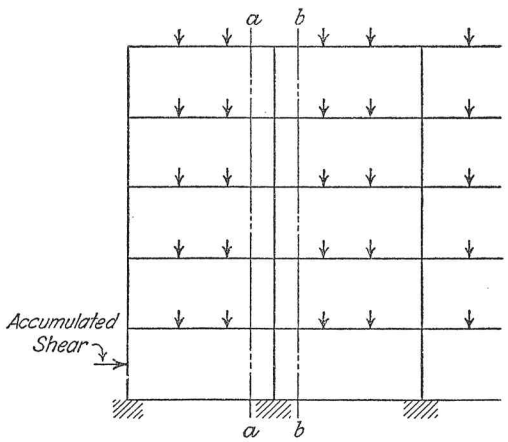

Tremendous Stress in Lower Columns if "Arch Action" Existed.

FIG. 15. Statics of Building Frame.

The same reasoning applies to the interior columns, as can be seen by passing two vertical planes, a–a and b–b, one on each side of the first row of interior columns. If arch action cannot be depended on in the end spans, then by statics we cannot depend on it in the interior spans.

The above discussion is not intended as a general solution of this problem nor as a proof that arch action may not exist in some girders for certain conditions, but is introduced here to illustrate how much information can be obtained even in very complicated cases by considerations of statics combined with study of the deformation of the structure.

Statics of Bents and Arches. A bent, or structure of the shape shown in Fig. 16 (a), (b) or (c), is an arch in the sense that for vertical loads it has horizontal reactions as well as vertical reactions at the bases of the columns. The line of pressure in a bent has a true position and is not merely some string polygon. The position of the pressure line and consequently the forces in the corresponding force polygon will be

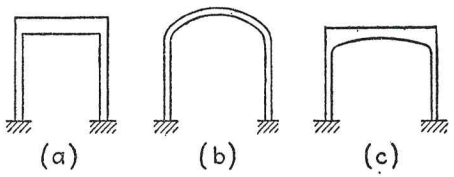

FIG. 16. Examples of Bents.

uniquely determined if three points on the pressure line are known. These points are points of inflection in the structure. If the arch is three-hinged these points are definitely determined; otherwise they will be determined by the restraints on the deformation of the structure.

Assume, for example, in Fig. 17 a bent 20 ft. high and 30 ft. wide loaded by 10^k applied as shown at the center of the left-hand column.

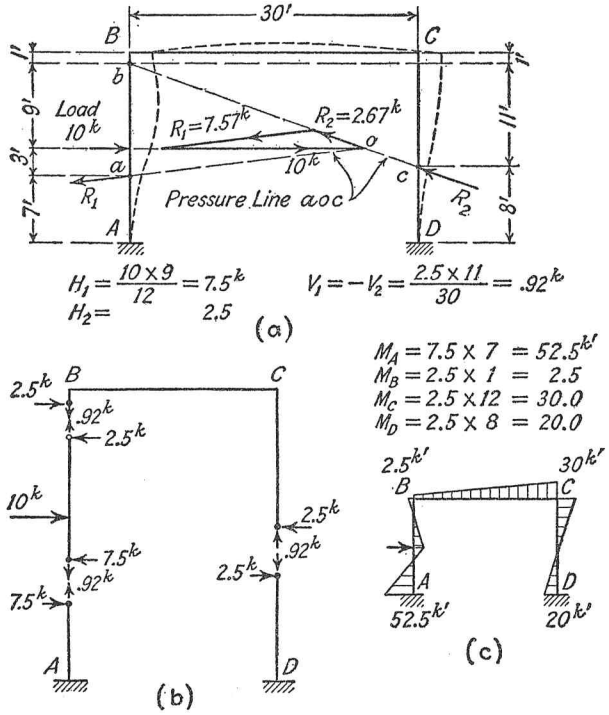

FIG. 17. Statics Applied to a Rectangular Bent.

The location of the inflection points will depend on the variation of moment of inertia along the axis of the bent. Suppose these points to have the positions indicated. The right reaction passes through the inflection points b and c and the left reaction through the inflection point a and the point o, where the load intersects the right reaction. A force polygon may now be drawn or the reactions computed as indicated. If several loads are involved a graphical solution may be more convenient.

Evidently, if a fair approximation can be made in sketching the deflected structure, the inflection points can be determined and from them the forces and moments.

The pressure line is itself a curve of moments, so that the moment on any vertical member is equal to the vertical component of the pressure line times the horizontal distance from the pressure line — more accurately, from the appropriate string of the pressure line — to the section considered. On any horizontal member the bending moment is the horizontal component of the pressure line times the vertical distance

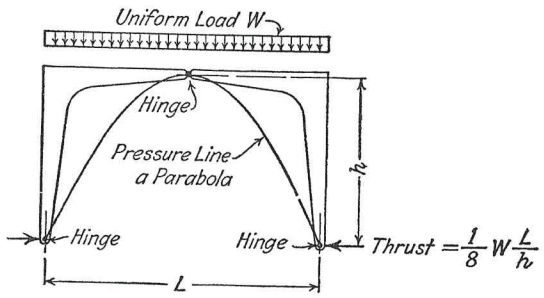

FIG. 18. Pressure Line in a Three-hinged Frame.

from the appropriate string of the pressure line to the section considered. In general the moment at any point in the structure is equal to the force represented by the corresponding string of the pressure line times the perpendicular distance to this string from the point.

This is the theory of the static arch. It can be shown that the pressure line in any structure lies as near as possible to the axis of the

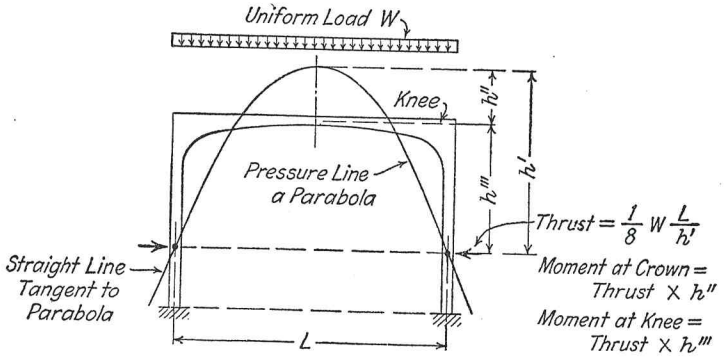

FIG. 19. Pressure Line in a Hingeless Frame.

structure if due allowance is made for the stiffness of different parts. If the structure is equally stiff in all its parts the pressure line will be that string polygon for the loads which most nearly fits the axis of the structure. Though the term " fits " is not quite precise, the principle

helps us to sketch directly the approximate pressure line on the assumption that the structure is equally stiff in all its parts.

A structure is usually not equally stiff in all its parts, and it will be necessary to modify the pressure line to take account of this fact. Stiffening any part of the structure tends to push the pressure line away, and weakening a part tends to draw the pressure line toward the part. Mathematical studies are of course necessary to develop judgment in this respect.

The pressure line for uniform load in a frame having three hinges is shown in Fig. 18. In Fig. 19 is shown a pressure line for a hingeless frame. Both, for the load shown, are parabolas. Note how the pressure line for the hingeless structure " hugs " the frame, cutting the axis twice on each side of the center.

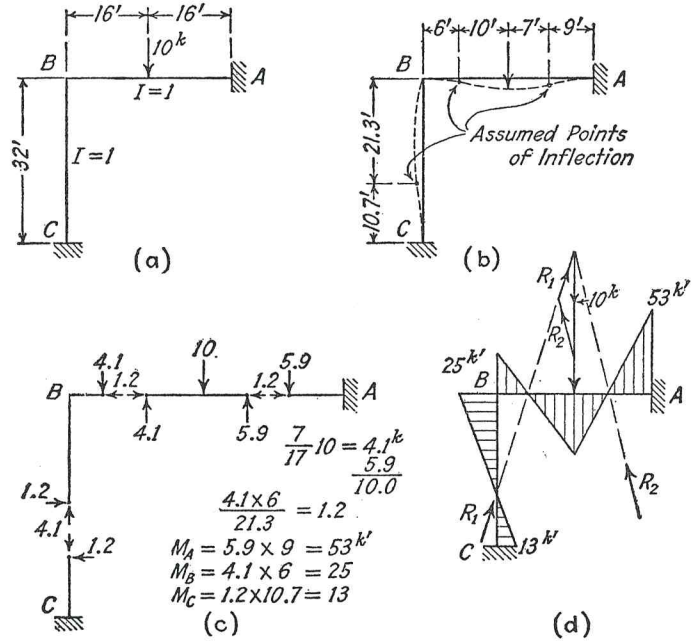

FIG. 20. Statics of an L-Frame.

Illustrations of the Application of Statics to Simple Bents. If the beam AB of Fig. 20 (a) were temporarily fixed at B, the points of inflection would be at the quarter points. However, when B is released the inflection point on the left side will move toward B. There will also be a point of inflection at one-third of the column height above C.

With the position of the points of inflection assumed as shown in (b)

the analysis by statics follows as indicated in (*c*) or graphically as in (*d*). Note that with the points of inflection known the moment curve of (*d*) follows at once.

In Fig. 21 (*a*), if the girder *BC* is relatively stiff, the points of inflection in the columns will be at the midpoints. In the example shown they will be a little above the midpoints. After we have estimated the

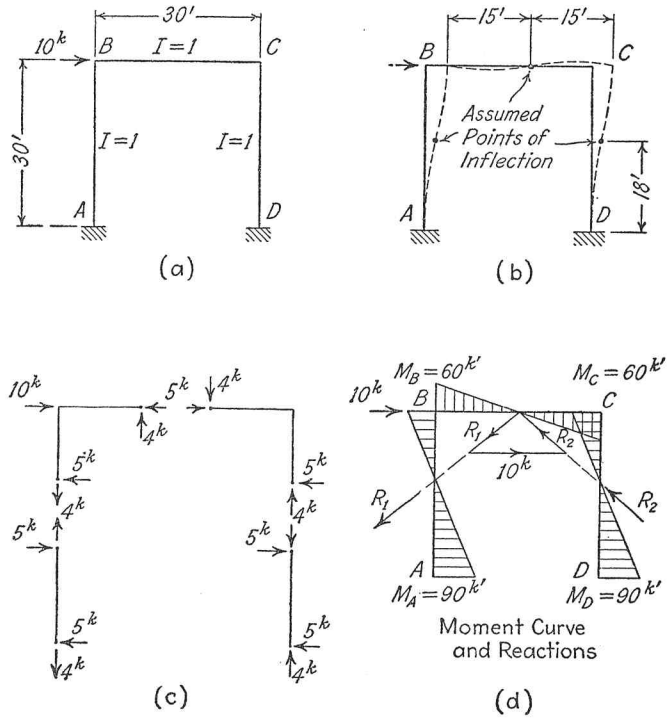

FIG. 21. Statics of a Bent.

location of the points of inflection, the structure may be analyzed by statics as indicated in the figure.

The Statics of Sidesway. It is usually possible to analyze a structure more readily if the joints do not move. In any structure in which the joints do move, if the assumption be made that the joints do not move it will be found that the laws of statics are not satisfied by the solution. Thus, if the bent shown in Fig. 17 be analyzed on the assumption that there is no horizontal movement of the top girder, it will be found that the shears at the bottom of the column do not add up to 10^k, the total load on the structure. Actually the structure will deflect laterally until $\sum H = 0$. This is usually referred to as "sidelurch" or "side-

sway"; it is a simple matter to determine a reasonably exact set of moments in the structure due to this lateral deflection and it is not difficult, by methods shown later, to determine exact values. If in this case we can determine a total shear in the columns corresponding to a given set of moments due to lateral deflection, then, by adding these moments in proper proportion to those found in the previous solution, the structure may be made to satisfy the laws of statics. Since both moment curves meet the conditions of continuity, we have thereby achieved a solution uniquely correct for the problem.

Illustrative Problem — Statics of an Irregular Bent. An interesting problem in statics occurs where all moments at the joints, and the

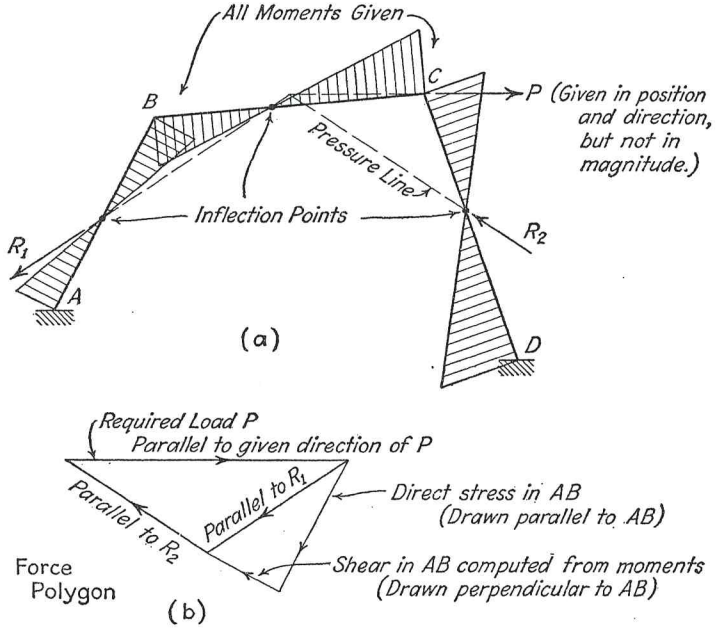

FIG. 22. Pressure Line from Known Moments.

direction and location of the load, are known in a frame such as that shown in Fig. 22, and it is desired to determine the magnitude of the load producing this condition. With the moments known at the ends of the members we can determine the points of inflection. This gives us a three-hinged arch for which the location of the pressure line is known. By finding the shear in any one member such as *AB* we know one component along one string of this pressure line and hence can draw the whole force polygon as shown in the figure.

CHAPTER III

GEOMETRY OF DEFLECTED STRUCTURES

In the previous chapter, emphasis has been placed on the statics of indeterminate structures, the geometrical relations being merely sketched. In the present chapter, attention is directed chiefly to the geometry of flexure. The reader should observe the simplicity of the fundamental geometrical concept — the geometry of small angles.

A. The Geometry of Flexure

Elements of Geometry of Flexure. Suppose that bending occurs on two right sections mn and $m'n'$ a short distance ds apart in the beam AB, Fig. 1 (a). This part of the beam will then appear as shown exaggerated in (b), large angles being shown for clearness. Actually,

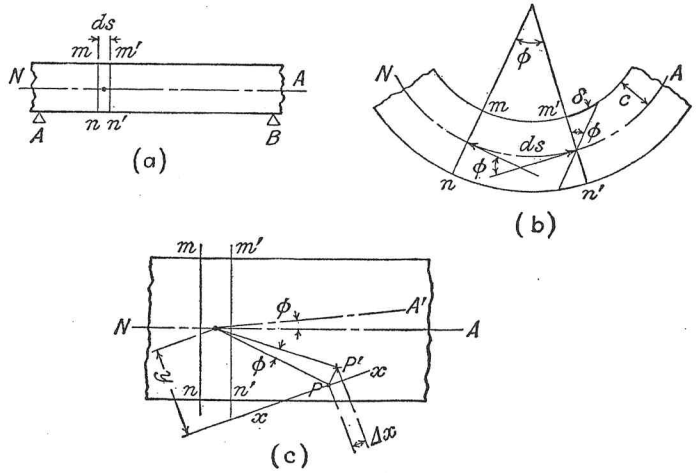

FIG. 1. Elementary Geometry of Flexure.

all angle changes involved in beam analysis are so small that the length of chord may be taken equal to that of the arc. The angle change in the length ds is a geometrical consequence of the shortening of the fibers on one side of the neutral axis and the lengthening on the other. If δ is the stretch in any fiber distant c from the neutral axis, $\phi = \delta/c$. This is true whether the flexure is combined with direct stress or not.

If one end of the beam segment is thought of as fixed in position and the other end is rotated through this small angle ϕ, as shown in (c), the movement Δ_x of any point, such as P, on the revolved side, in any direction x–x, will be ϕ times the lever arm y, where y is the distance from the center of rotation measured normal to the direction x–x. That is, if plane sections remain plane, and shear distortions are neglected, the essential geometrical relations are simple and obvious:

$$\phi = \frac{\delta}{c} \qquad \text{and} \qquad \Delta_x = \phi \cdot (\text{distance } y)$$

The angle change produced in any short length of the axis of a beam by a given bending moment in this length can usually be proportionately predicted. It can be predicted that a given section, say 1 in. long, subject to a given bending moment, will have two or three times the angle change of another section subject to a different bending moment. The angle change in a given length due to a given moment is a function of the moment and of the physical properties of the section. The physical properties of a section being known, the moments due to continuity follow as a consequence of the loads and of the relative angle change, that is, they follow as a matter of geometry and of statics. Where definite deflections are involved, the true properties of the section are needed; but in computing moments due to loads on continuous structures, only relative values of these properties are required.

The physical property of the section needed here is the angle change per unit of moment per unit of length — the value $\phi/(M\,ds)$. But this is not convenient. If we know the fiber stress and modulus of elasticity at one fiber

$$\delta = \frac{f}{E}\,ds$$

by definition of elastic modulus.

If, further, we find f by the beam formula

$$\frac{f}{c} = \frac{M}{I}$$

we can now write the desired property of the section

$$\frac{\phi}{M\,ds} = \frac{\delta}{cM\,ds} = \frac{f}{MEc} = \frac{1}{EI}$$

Application to Reinforced Concrete. In beams of reinforced concrete, the beam formula cannot be applied accurately, though we may find it convenient to apply it or its equivalents in design. It is probably not worth while to discuss at length, at this point, the reasons for this —

inapplicability of Hooke's Law, uncertainty as to depth of tension cracks, local bond slip at cracks, distortion of plane sections where cracks occur, more especially uncertainties as to the action of the flanges of T-beams — but it is extremely important to recognize that the term I when used in the analysis of structures of reinforced concrete is a convenient fake. It is not $\int y^2\,da$, a mathematical constant, at all.

Moreover, E is not a definite term in concrete. The stress-strain ratio varies with different mixes — and somewhat erratically, as well — with intensity of stress and with duration of stress.

These uncertainties are not usually sources of great uncertainty in the results, though they are in some cases. Let no one be deceived by purely mathematical attempts to deduce values for the term $1/(EI)$. The exact value of $\phi/(M\,ds)$ at any section depends on many factors and much on chance. All that we can hope to do is to see whether these uncertainties make much difference. In continuous girders they are not usually very important, in arches they are not particularly important; but in columns flexed by connecting girders they are important and introduce large uncertainties into the column stresses; and in all cases where given or assumed deformations are involved — shrinkage, change of length due to temperature change, settlement or rotation of foundations — they introduce great uncertainties.

The Analogy of Angle Loads. (*a*) *Elementary Geometry.* As explained above, in any line of small curvature, the changes of direction, or angular changes, along the line produce relative linear movements of points on opposite sides of the angle equal to ϕy, the angle times the radius arm to the direction of movement considered.

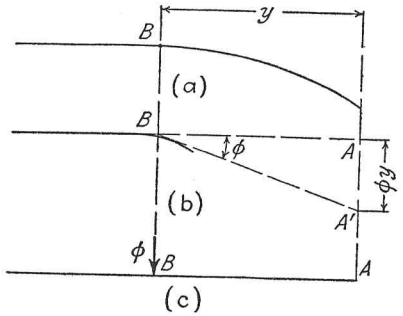

FIG. 2. Geometry of a Bent Line.

A structural engineer finds it convenient to think of this as a statical moment and to say that the vertical movement AA', Fig. 2, with reference to the tangent at B, due to curvature at B, is:

The statical moment about A of the angle at B considered as a vertical force at B (as in (*c*) of Fig. 2).

If all angles between A and B are taken into account, it is, then, convenient to say that:

(1) Change of slope from A to B = sum of angles A to B.

(2) Deflection of A vertically, referred to tangent at B = statical moment about A of all angles between A and B considered as vertical loads. If the deflection of A in any other direction is wanted, the angle loads should be inclined in this direction.

These two analogies give a means convenient to the structural engineer — note that it is a matter of convenience — of computing slopes and deflections of a curve with reference to the tangent, providing the curvature is very small.

Quite as often it is desired to refer the slopes and deflections to the chord. Suppose we wish to find the slope and deflection at C–G, Fig. 3,

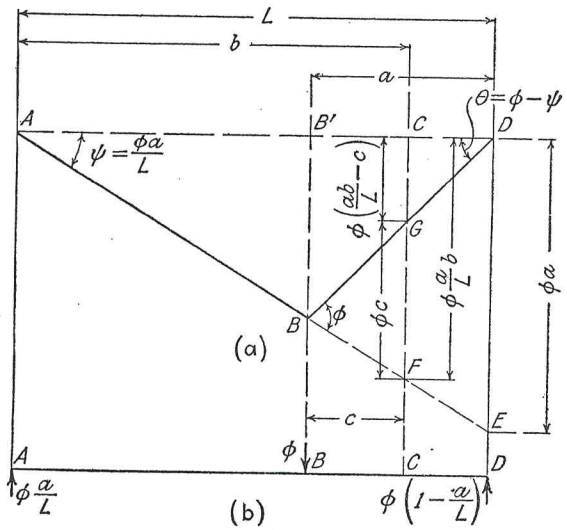

FIG. 3. Geometry of a Broken Line.

of the line ABD having an angle ϕ at B, these slopes and deflections to be referred to the chord AD. The angle ϕ is assumed to be very small.

We can write

$$\text{Slope } \theta = \phi - \psi$$

$$\text{Deflection } CG = CF - FG$$

But

$$DE = \phi a$$

$$\psi = \frac{DE}{L} = \phi\,\frac{a}{L}$$

Also

$$CF = DE\,\frac{b}{L} = \phi\,\frac{ab}{L}$$

$$FG = \phi c$$

Hence

$$\text{Slope} = \phi\left(1 - \frac{a}{L}\right) \qquad \text{(Shear at } C\text{)}$$

$$\text{Deflection} = \phi\left(\frac{ab}{L} - c\right) \qquad \text{(Moment at } C\text{)}$$

But these are values of the shear and bending moment respectively at C on a simple beam AD loaded with a load ϕ at B.

By summing these results for a series of small angles, we deduce:

(3) The slope of a bent line at any point measured with reference to a chord is the same numerically as the shear which would be produced on the chord acting as a beam simply supported at its ends and supporting the angles as loads.

(4) The deflection of a bent line at any point away from its chord is the same numerically as the bending moment which would be produced on the chord acting as a beam simply supported at its ends and supporting the angles as loads.

(*b*) *Moment Areas.* If the beam formula applies the angle changes along the beam are each

$$\phi = \frac{M\,ds}{EI} = \frac{\text{area under a differential length of moment curve}}{EI}$$

we can restate these geometrical rules in terms of what are called moment areas, as follows:

When measured with reference to the tangent at any point A (Fig. 4):

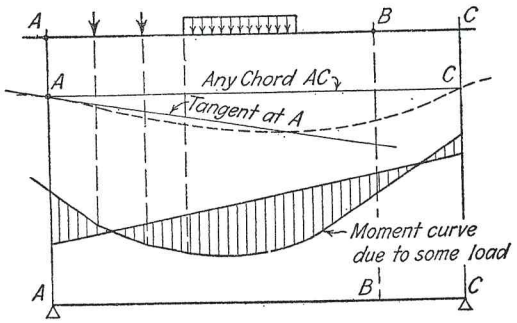

FIG. 4. Moment Area Relations.

(1) The slope of a beam at point B is numerically equal to the area under the moment curve between A and B, divided by EI, if EI is constant, or is the area under the $M/(EI)$ curve between A and B in any case.

(2) The deflection of a beam at point B is numerically equal to the statical moment about B of the area under the moment curve between A and B, divided by EI, if EI is constant, or is the statical moment about B of the area under the $M/(EI)$ curve between A and B in any case.

When measured with reference to any chord AC of the bent beam:

(3) The slope at point B is numerically equal to the shear at point B on a simply supported beam AC due to the area under the moment curve as a load, divided by EI, if EI is constant, or is this shear for a load equal to the area under the $M/(EI)$ curve in any case.

(4) The deflection at point B is numerically equal to the bending moment at B on a simply supported beam AC due to the area under the moment curve as a load divided by EI, if EI is constant, or is this bending moment for a load equal to the area under the $M/(EI)$ curve in any case.

These theorems are well known to structural engineers as the theorems of area moments, or of moment areas. It seems important not to lose sight of the fact that they are merely restatements by analogy of theorems of geometry, with the assumption of the beam formula.

(*c*) *Stress Areas.* In certain cases it is more convenient to compute slopes and deflections in terms of the fiber stresses instead of the moments. To do this does not even involve the assumption of the beam formula, though it assumes the conservation of plane sections — for normal cases a very safe assumption.

Since

$$\phi = \frac{f\,ds}{Ec}$$

where c is the distance from the neutral axis to the fiber whose stress is f, we may rewrite each of the four theorems of area moments by using as a load the area under the curve of fiber stress in the outer fibers, divided by Ec, where Ec is constant, or the area under the $f/(Ec)$ curve in any case.

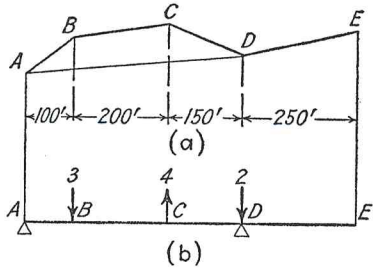

FIG. 5. Geometry of Angle Changes

Illustrations of the Geometry of Flexure. (*a*) *Pure Geometry.* To bring out clearly the geometrical nature of these theorems, consider the following problem.

A line of traverse as shown in Fig. 5 has its angles modified as follows:

B increased 3/10000 radian, C decreased 4/10000 radian, D increased 2/10000 radian. Call the new positions of the points B', C', D', E'. Find the total rotation of DE with reference to AB, the displacement of E with reference to AB, the rotation of $B'C'$ with reference to AD', the displacement of B' with reference to AD', produced by these angle changes. All displacements are to be measured normal to the line of dimensions shown.

Consider a beam loaded as shown in Fig. 5 (*b*) and supported at A and D:

Rotation of DE with reference to $AB = (3 - 4 + 2)\ \dfrac{1}{10000}$ radian.

Displacement of E referred to AB

$$\begin{aligned} +2 \times 250 &= +500 \\ -4 \times 400 &= -1600 \\ +3 \times 600 &= +1800 \\ \hline &= \frac{700}{10000} \text{ ft.} \end{aligned}$$

Rotation of $B'C'$ with reference to AD' =

Shear in panel BC on beam AD =

$$\frac{(3 \times 100) - (4 \times 300)}{450} - (-4) = +2 \times \frac{1}{10000} \text{ radian}$$

(Notice that this rotation is referred to AD' and not to AD.)

Displacement of B' referred to AD' =

Bending moment at B on beam AD =

$$\frac{3 \times 100 \times 350}{450} - \frac{4 \times 100 \times 150}{450} = 100 \times \frac{1}{10000} = \frac{1}{100} \text{ ft.}$$

Note that rotation of $D'E'$ and displacement of E' with reference to AD' cannot be found directly by the above theorems. We can, however, find the rotation of $C'D'$ with reference to AD' and the rotation of $D'E'$ and the displacement of E' with reference to $C'D'$.

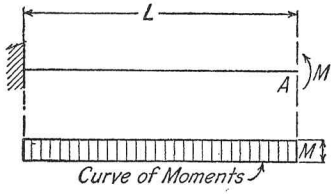

FIG. 6. Moment Areas — Cantilever Beam.

(*b*) *Moment Areas.* (1) Find the slope and deflection at A, Fig. 6, due to the moment applied at the end of the cantilever. EI constant.

The curve of moments is as shown.

Slope at A = area under $\dfrac{M}{EI}$ curve $= \dfrac{ML}{EI}$.

Deflection at A = statical moment about A of area under $\dfrac{M}{EI}$ curve $= \dfrac{ML}{EI} \cdot \dfrac{L}{2} = \dfrac{ML^2}{2EI}$.

(2) Find slope and deflection at A, and at B (or B') Fig. 7.

Slope at A = shear due to M curve = 0.

Deflection at A = moment due to M curve on $C'C$

$$= \frac{1}{8}\frac{ML^2}{EI} = \frac{1}{8}\frac{PaL^2}{EI}$$

(Notice that in the numerical case care is required to preserve the same units throughout.)

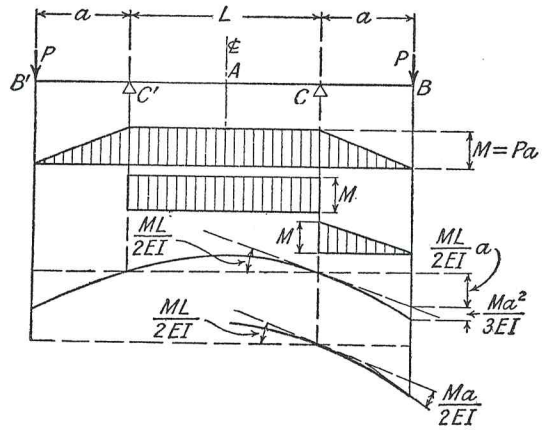

FIG. 7. Moment Areas — Beam with Cantilever Ends.

To find slope and deflection at B, find first the slope at C.

Slope at C = shear due to M curve on $C'C = \dfrac{ML}{2EI}$.

Slope at B referred to tangent at C =

(area of moment triangle between B and C) $\times \dfrac{1}{EI} = \dfrac{Ma}{2EI}$.

Deflection at B due to slope of tangent at $C = \dfrac{ML}{2EI}\, a$.

Deflection of B away from this tangent =

(statical moment about B of triangle between B and C) $\times \dfrac{1}{EI}$

$$= \frac{Ma}{2} \cdot \frac{2}{3} a \frac{1}{EI} = \frac{1}{3}\frac{Ma^2}{EI}$$

Hence
$$\text{Slope at } B = \frac{ML}{2EI} + \frac{Ma}{2EI}$$
$$\text{Deflection at } B = \frac{MLa}{2EI} + \frac{Ma^2}{3EI}$$

(3) The moment curve on a column is known to be as shown in Fig. 8. Find relative rotation ϕ of the two ends and relative deflection Δ of the top with reference to the tangent at the bottom.

By inspection, area under M curve $= 0$, $\phi = 0$.

Taking statical moment about the top, of the two triangles

$$\Delta = \overbrace{\frac{1}{2} M \frac{h}{2}}^{\text{area of one triangle}} \times \overbrace{\frac{2}{3} h}^{\text{lever arm of couple}} \times \frac{1}{EI} = \frac{1}{6} \frac{Mh^2}{EI}$$

If the corresponding shear is H,

$$M = \frac{Hh}{2} \qquad \Delta = \frac{1}{12} \frac{Hh^3}{EI}$$

(4) Where the geometrical figures of the moment curves are more complicated, separate them into the simplest figures possible. In

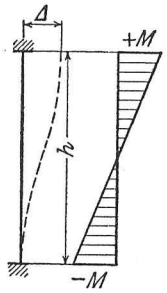

FIG. 8. Moment Areas — Column with Top Displaced.

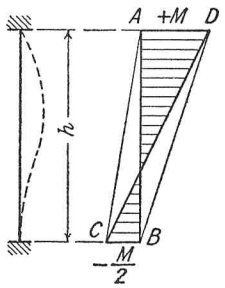

FIG. 9. Moment Areas — Column with Rotated Top.

Fig. 9 the moment diagram is conveniently treated by dividing into triangles DBC and ABD.

$$\phi = \frac{1}{2} \frac{Mh}{EI} - \frac{1}{2} \frac{Mh}{2EI} = \frac{Mh}{4EI}$$

Δ at top referred to tangent at bottom $=$

$$\frac{1}{2} \frac{Mh}{2EI} \frac{2}{3} h - \frac{1}{2} \frac{Mh}{EI} \frac{1}{3} h = 0$$

Remarks on Moment Areas. A student of indeterminate frames should be very familiar with these principles and will probably remember formulas for some of the simpler cases. It is not worth while, however, to try to remember the formulas. Nor should the student spend much

SLOPES ϕ, AND DEFLECTIONS Δ, AT POINT A WITH REFERENCE TO LINE BC

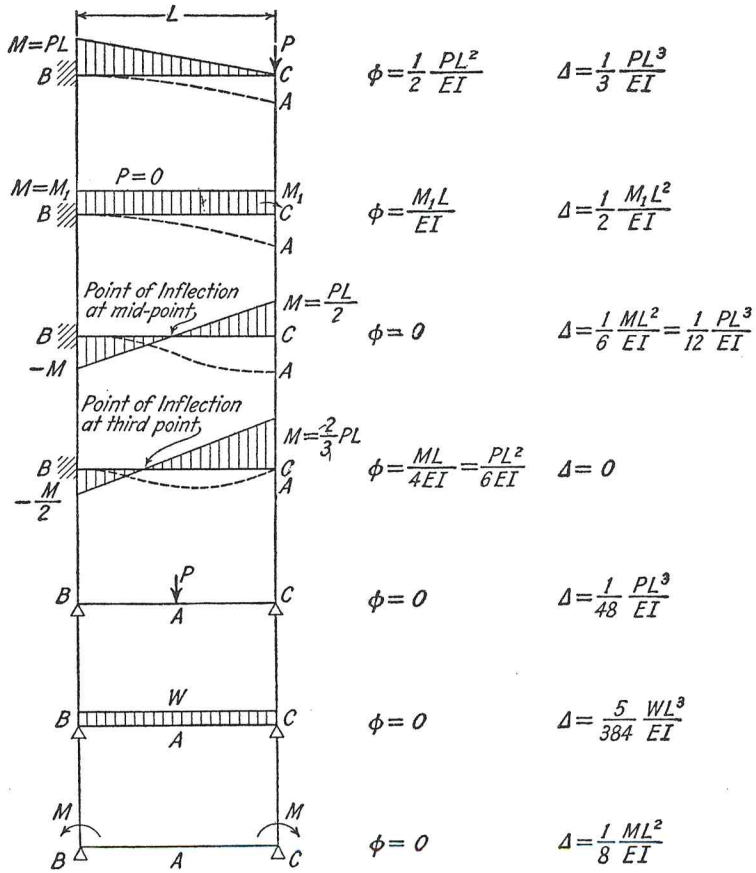

FIG. 10. Slopes and Deflections by Moment Areas.

time working out complicated cases involving irregular loading or variable I values. There is not often occasion to compute actual slopes and deflections in practice. If they are needed they are usually more conveniently found from the fiber stresses as explained later. These theorems are used chiefly as basic principles from which others are derived for use in analysis.

Note that always $$\text{Slope} \propto \frac{ML}{EI} \propto \frac{PL^2}{EI}$$

$$\text{Deflection} \propto \frac{ML^2}{EI} \propto \frac{PL^3}{EI}$$

The cases shown in Fig. 10 are perhaps worth tabulating.

Fig. 11 contains some useful data for moment-area computations.

(*c*) *Stress Areas.* Two types of problems may arise: the fiber stress may be known, as it is for the loading for which the structure is

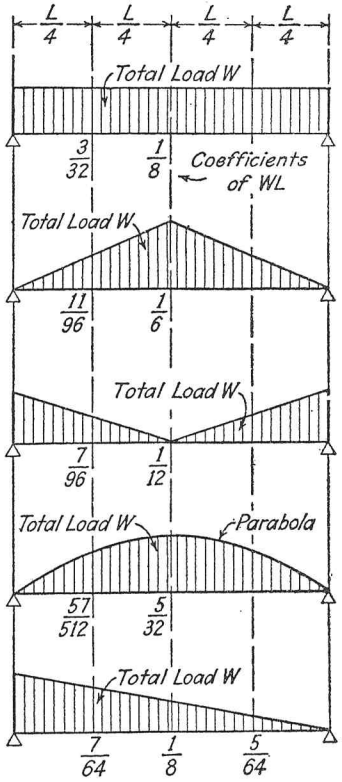

FIG. 11. Data for Moment-area Computations. Moment Coefficients for Different Types of Loading.

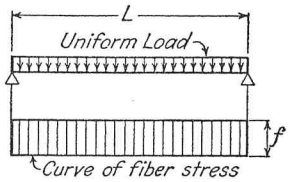

FIG. 12. Stress Areas — Uniform Stress Intensity.

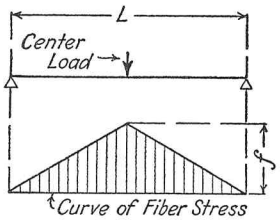

FIG. 13. Stress Areas — Varying Stress Intensity.

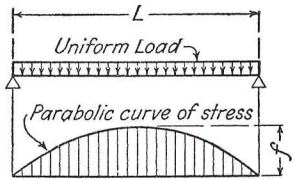

FIG. 14. Stress Areas — Girder of Constant Section — Uniformly Loaded.

designed, and the slope or deflection wanted; the slope or deflection may be known and the fiber stress desired.

(1) Imagine a girder simply supported and designed at each section for a uniform load, as shown in Fig. 12. Then for this load the fiber

stress is the working stress and is constant across the girder. We may now consider the beam loaded with f/Ec as a load and compute shears and moments. E and c constant.

$$\text{End slope} = \text{end shear} = \frac{1}{2}\frac{fL}{Ec}$$

$$\text{Maximum deflection} = \text{center moment} = \frac{1}{8}\frac{fL^2}{Ec}$$

(2) A simple beam of uniform section, Fig. 13, loaded at the center, having a maximum stress f. E and c constant.

$$\text{End slope} = \frac{1}{4}\frac{fL}{Ec}$$

$$\text{Maximum deflection} = \frac{1}{12}\frac{fL^2}{Ec}$$

(3) Girder of constant section, simply supported, uniformly loaded to give maximum fiber stress f. The stress curve is as shown, Fig. 14.

If c is constant

$$\text{Maximum deflection} = \frac{5}{48}\frac{fL^2}{Ec}$$

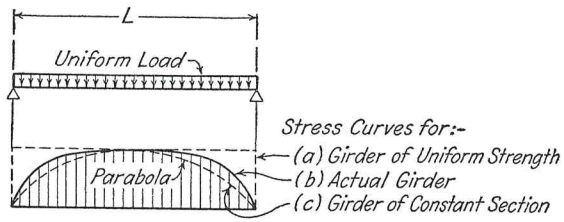

FIG. 15. Stress Areas — Girder Uniformly Loaded.

(4) In general the maximum deflection of a girder simply supported, for its design load, lies between the two values $\Delta = \frac{1}{8}\frac{fL^2}{Ec}$ and $\Delta = \frac{5}{48}\frac{fL^2}{Ec}$ because the curve of stress, as shown in Fig. 15, is not quite uniform nor does it vary with the curve of moments.

Hence approximately

$$\Delta = \frac{1}{9}\frac{fL^2}{Ec}$$

(5) A continuous beam designed for a fixed maximum working stress at each section and loaded for maximum positive moment.

The curve of maximum moments will in general be like that shown in Fig. 16 (*a*).

When loaded for maximum positive moment the stress (in an upper or lower fiber) will vary about as shown in (*b*).

The maximum deflection then is approximately that due to the uniform stress f less that due to the shaded stress areas shown in (*c*).

$$\Delta = \frac{1}{8}\frac{fL^2}{Ec} - \frac{3}{2}f\,\frac{L}{6}\,\frac{L}{12}\,\frac{1}{Ec} = \frac{5}{6}\cdot\frac{1}{8}\frac{fL^2}{Ec} \text{ approximately.}$$

If c is the same as for a simple beam similarly designed, this serves to show how small is the decrease in maximum deflection due to con-

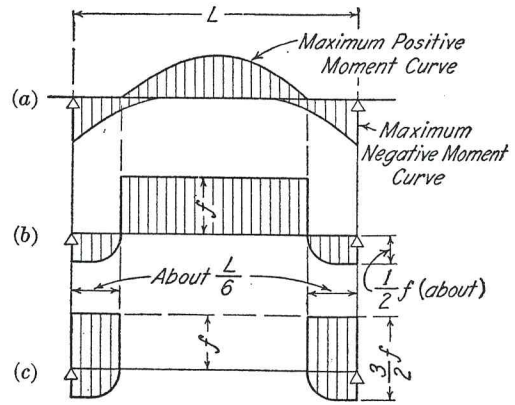

FIG. 16. Stress Areas — Continuous Girder.

tinuity in a beam, because both the simple beam and the continuous beam are designed for the same fiber stress. Of course, the girder is not designed throughout for maximum stresses, and the values above need some modification.

Designing for Given Deflections. The relations between deflection and fiber stress often enable us to predict at once the fiber stress.

(*a*) *Settlement of a Support — Continuous Beam of Two Spans.* Suppose a known settlement Δ occurs at the center support of a continuous plate girder of two spans. The variation in the moment of resistance may be expected to approximate the curve of maximum moments. If the approximate variation of the moment of resistance is known, the approximate shape of the curve showing the flange stress may be drawn. The deflection may then be computed in terms of f_{max} as the bending moment due to the f/Ec curve as a load.

Fig. 17 is merely a sketch but it shows the steps by which the problem

may be approached. If the moment of resistance approximates the curve of maximum moments (drawn without reference to sign) the curve of fiber stress will have the shape shown in (*b*). If the beam is of uniform section, the curve will have the shape shown in (*a*).

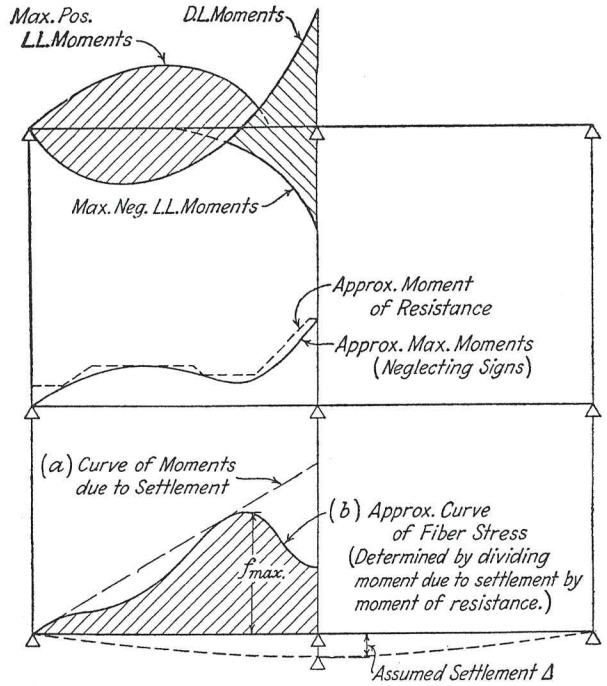

FIG. 17. Stress Due to Settlement of Support — Girder of Two Spans.

In either case

$$\Delta = \frac{1}{9}\frac{f_{max}(2L)^2}{Ec} \text{ approximately.}$$

If we take $c = d/2$, as it is in a symmetrical section

$$\Delta = \frac{8}{9}\frac{f_{max}L^2}{Ed} \text{ approximately.}$$

$$f_{max} = E\,\frac{d}{L}\,\frac{\Delta}{L} \text{ approximately.}$$

(*b*) *Settlement of Supports in a Continuous Girder of Several Spans.* Fig. 18.

In this case $$\Delta = \frac{1}{12}\frac{f_{max}(2L)^2}{Ec} \text{ approximately.}$$

If $c = \frac{d}{2}$ $\qquad f_{\max} = 1.5E \frac{d}{L} \frac{\Delta}{L}$ approximately.

This is quite rough, merely a sketch, but shows how such a problem may be approached. The value of Δ is almost invariably a guess.

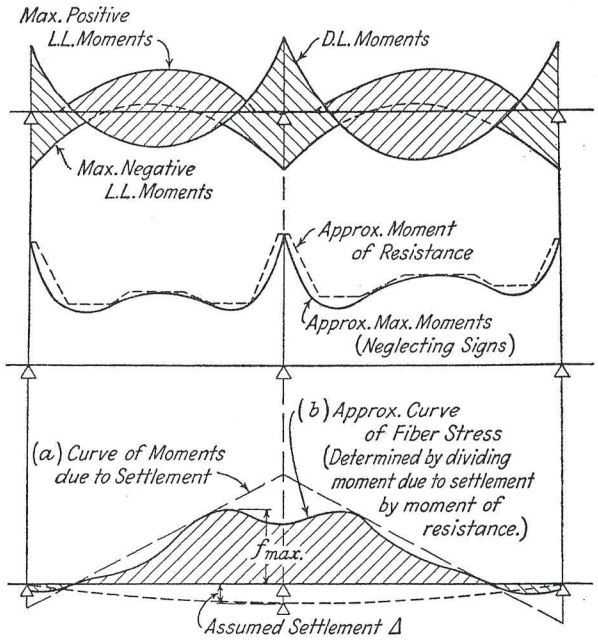

FIG. 18. Stress Due to Settlement of Support — Continuous Girder.

Since the working stress allowed in steel is $6E/10{,}000$, and normally d is about $L/12$

$$\frac{f_{\max}}{f_{\text{allow}}} = 200 \frac{\Delta}{L}$$

roughly, in a continuous girder.

For a settlement of 1 in. and spans of 100 ft., then

$$\frac{f_{\max}}{f_{\text{allow}}} = \frac{1}{6}$$

which is not very serious.

(c) *Deflection of a Column Top.* A column is deflected at its top without rotation, Fig. 19. Here

$$\Delta = \frac{1}{6} \frac{f_{\max} h^2}{Ec}$$

If the section is symmetrical, $c = d/2$. Hence

$$\Delta = \frac{1}{3} \frac{f_{\max} h^2}{Ed}$$

$$f_{\max} = 3E \frac{\Delta}{h} \frac{d}{h}$$

(d) *Physical Limitations.* These analyses are reasonable and useful for steel. For structures of reinforced concrete they are not satisfactory for the reasons assigned above. (See also discussion on page 27.) The maximum stress in the steel in a given length is larger than the average stress. The above values, if used for the stress in the reinforcement, should then be multiplied by some factor greater than unity, and probably considerably greater.

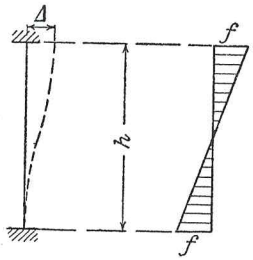

FIG. 19. Stress Areas — Column with Top Displaced.

The values are probably more dependable for the stresses in the concrete than for those in the steel, in a beam of reinforced concrete. In columns, where there is little if any cracking, and no bond slip — except at the cracks — most of the difficulties disappear, although the great uncertainty in the value of E remains.

(e) *Stress Areas in a Loaded Bent.* A bent is shown in Fig. 20 consisting of a stiff girder supported on relatively flexible columns. The girder is loaded with its maximum load and is so designed that under

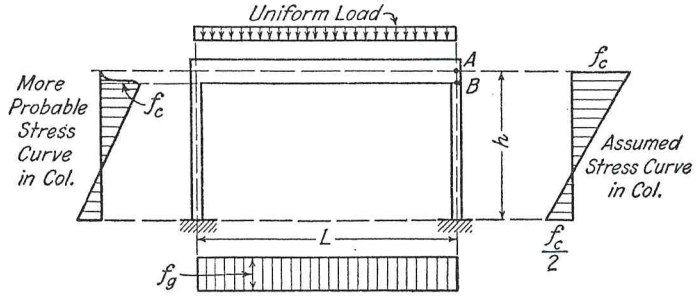

FIG. 20. Stress Areas — Loaded Bent.

this load the stress intensity across it is nearly uniform. Call this stress intensity f_g. What is the maximum bending stress f_c in the column?

The slope at the end of the girder is approximately $\phi = \frac{1}{2} f_g L / E c_g$.

The stress curve in the column is as shown if it is of uniform section,

since there is rotation without deflection at the top. (See also Fig. 9, page 34.)

$$\phi = \frac{1}{4}\frac{f_c h}{E c_c}$$

Since the rotation is the same in both girder and column

$$\frac{1}{2}\frac{f_g L}{E c_g} = \frac{1}{4}\frac{f_c h}{E c_c}$$

$$\frac{f_c}{f_g} = 2\frac{L_c}{h}\frac{c_c}{c_g}$$

If $c = d/2$ in both cases

$$\frac{f_c}{f_g} = 2\frac{L}{h}\frac{d_c}{d_g}$$

or

$$\frac{f_c}{f_g} = 2\frac{d/h \text{ of column}}{d/L \text{ of girder}}$$

This solution, however, merely indicates a method and gives some idea of the effect. It neglects two facts: the column is not of uniform section to the center of the girder; the maximum stress in the column occurs not at the center but near the bottom of the girder. It also assumes that the rotation of the end of the girder is not restrained appreciably by the column.

We might now proceed to solve the problem on the assumption that the stress curve in the column was as shown on the left in the figure. In this case, however, note that we should compute the slope so that the deflection of the column is zero at A; it is evidently not zero at B.

Remarks on Stress Areas. This is a very powerful method of reasoning in many cases.

Note that

$$\text{Slope} \propto \frac{fL}{Ec}$$

$$\text{Deflection} \propto \frac{fL^2}{Ec}$$

If the slope or deflection is fixed, the stress from this source will be increased if we make the beam deeper, and cannot be decreased by making the beam wider or by adding flange material. For fixed displacements and given depths the resulting stresses are fixed, and these must be deducted from the allowable stresses to determine a working stress for design at critical sections.

Comparative Deflections. By studying the f/c curves, interesting comparative data as to the action of structures under load are obtained.

After the results are computed, their significance often presents the first real difficulty. There is little doubt that there is an intimate relation between flexibility, vibration, impact and durability. A structure is a machine absorbing and giving out work as loads are applied or removed. But such statements as these are very vague and not immediately helpful. There is doubtless sound engineering judgment back of the standard acceptance test of limited deflection under a test load. Deflections exceeding those computed hang up a pretty definite danger sign that somewhere the structure is not acting as design theory would indicate.

In a sense, deflection measurements are equivalent to strain gauge measurements for the structure as a whole instead of for its constituent parts. Like strain gauge measurements also, they are frightfully difficult to interpret, and may be quite misleading in structures of reinforced concrete.

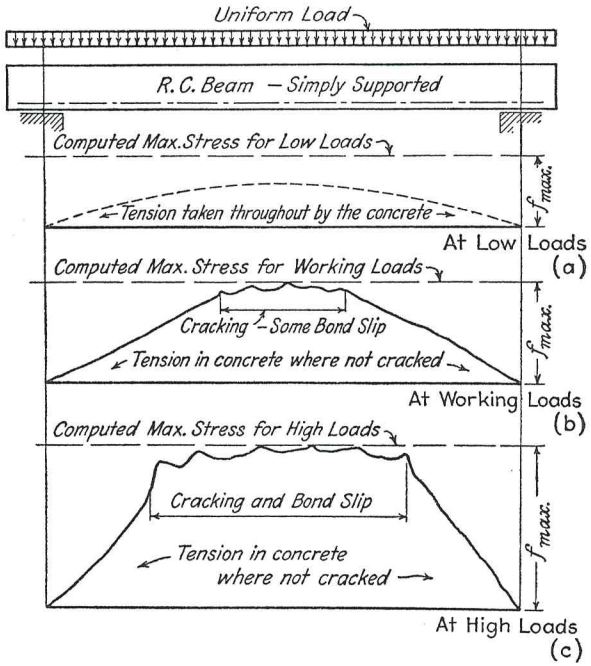

FIG. 21. Stress Areas — Beam of Reinforced Concrete.

Limitation of the Application of Stress Areas to Reinforced Concrete. There are serious difficulties in applying these methods, or the method of area moments, which is the same thing in another form, to reinforced-concrete beams. The difficulty arises from the fact that we know the

maximum value that f may have at a crack, but we do not know its variations. Thus, in a beam of reinforced concrete simply supported and having the same reinforcement throughout, the stress in the steel might vary somewhat as shown in Fig. 21. The neutral axis, moreover, and hence the value of c, shifts from section to section.

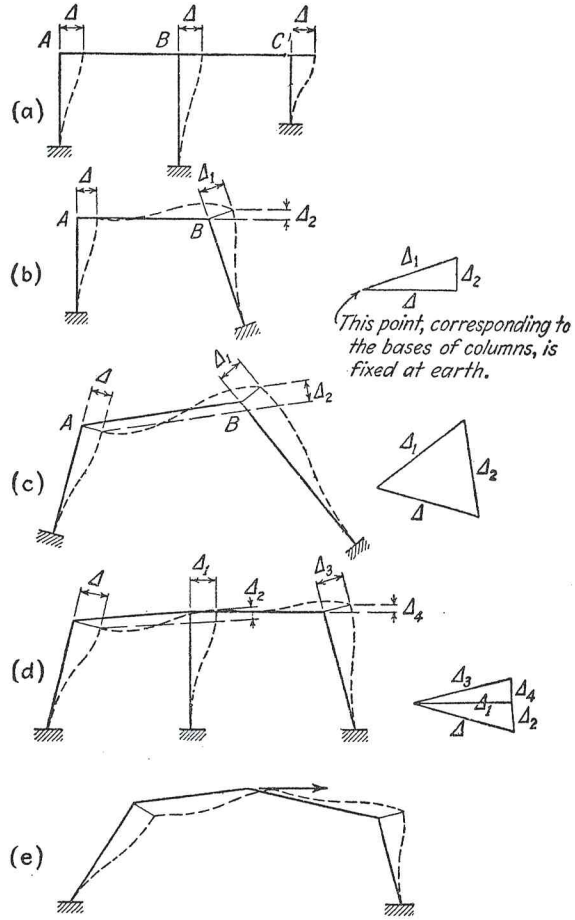

FIG. 22. Frames Distorted Laterally — Joints without Rotation.

We may enumerate the uncertainties:

(*a*) The steel stress depends on the amount of cracking.

(*b*) The steel stress is affected by bond slip in the cracked area.

(*c*) Both these factors affect the c values for the steel, as does also the uncertainty of E for concrete.

(*d*) The E of the concrete varies with time.

Consequently the deflection of the simplest concrete beam is difficult to predict. When the problem is complicated by the addition of a slab and the uncertainties of its action, we may as well guess at the deflection in the first place, of course using any experience that we may have had with similar structures.

This fact does not necessarily, or commonly, affect seriously the elastic analysis. But it is important to recognize it as a fact.

Geometry of Deformation of Frames. In the study of continuous frames it is sometimes convenient to imagine a forced deformation and compute the resulting forces. In most cases the relative deformation of points on the frame is obvious, but occasionally it involves interesting problems in geometry.

For example, suppose that in the frames shown in Fig. 22 joint A is displaced a known distance Δ by forces acting on the structure. It is desired to find the movement of all other joints, neglecting any slight change in length of the members.

Thus in (*a*) it is evident that the tops of all columns must have the same horizontal movement if we neglect any slight change in length of the girder.

In case (*b*), point B must move perpendicular to the column on the principle that for very short arcs the chord is normal to the radius. With reference to the new position of point A, point B must move normal to the girder. We can then draw the deformation triangle shown in (*b*). The direction and value of one deformation, Δ, is known, and so are the directions of the other two, Δ_1 and Δ_2. Also Δ_1 is measured from the earth, the initial point of the diagram.

Case (*c*) is similar to case (*b*).

In case (*d*) the diagram is extended to three columns; it might be extended to any number of spans.

In the above cases there is only one degree of freedom of movement; the joints cannot be independently displaced. In case (*e*), however, there is more than one degree of freedom; the movement of all joints does not follow merely from knowledge of that of one joint.

A further application of the method is illustrated in Fig. 23. It is desired, in this case, merely to see how important the matter is, to find the effect of shearing distortion and of longitudinal deformation of the members on the moments in the frame there shown. This effect is usually entirely neglected because it is of no importance; in trusses, however, it is the source of important secondary stresses.

In Fig. 23, suppose we have first analyzed the structure, by methods to be discussed, neglecting the effect of these linear distortions, and from the forces thus found have computed the shearing distortion and change

in length of each member of the frame. Then lay off a diagram for these distortions as shown in (*b*). It will be found that the diagram does not close; that end C of girder AC, for example, does not coincide with end C of column CD.

In order to bring the structure together again it will be necessary to produce forced deformations as by bending these members enough to bring their ends together. The diagram gives the amount of such bend-

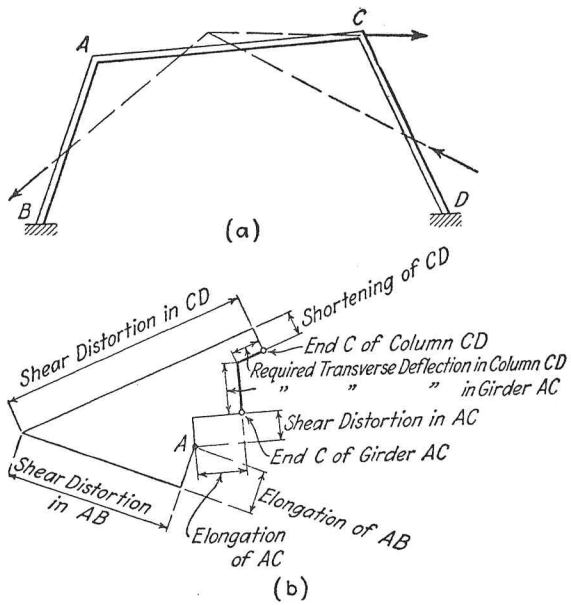

FIG. 23. Distortions Due to Shear and Longitudinal Forces in a Frame.

ing required. This may then be produced and the resulting moments in the structure computed. Of course, this changes somewhat the forces in the structure, but it will usually be evident, now, that the effect of shearing distortions and of longitudinal distortions is unimportant.

B. The Column Analogy

The Tool. The column analogy is a mathematical identity between the moments produced by continuity in a beam, bent or arch and the fiber stresses in a short column eccentrically loaded. The advantage of the analogy is the same as that of the analogy of moment areas or stress areas or angle weights. It reduces certain procedures in the determination of bending moments in continuous structures to a routine which is

familiar to structural engineers in the stress analysis of column sections eccentrically loaded.

The column analogy, then, is a tool. It is a rather mechanical device, like other tools, satisfactory if it works rapidly and accurately. It should be as mechanical and systematic as possible. One should satisfy himself once for all of its correctness and dependability and then learn to use it rapidly.

Because it is a mechanical tool — a formula, an analogy — it is not especially illuminating. The results got by the column analogy need to be interpreted in the more familiar terms of pressure lines and deformed structures already explained. The column analogy simply does with precision what these methods do somewhat crudely.

Uses of this Tool. The column analogy is used in this text first as an auxiliary to the method of moment distribution, where beams are of varying cross-section. Moment distribution assumes that the fixed-end moments, the stiffness and the carry-over factor are known in all beams in a frame. These terms are defined as

Fixed-end moments: Moments at the ends of a beam due to loads, or sometimes to other causes, if both ends of the beam are rigidly fixed into immovable supports.

Stiffness of a beam at one end: The moment required to produce unit rotation of that end when both ends are supported and the other end held fixed.

Carry-over factor (at the rotating end): The ratio of the moment at the fixed end to the moment producing rotation in the case just mentioned.

The column analogy is used later as a convenient method of determining the bending moments and the lines of thrust in arches of reinforced concrete when they are acted on by loads, by changes of temperature or by movement of abutments. It is also used to determine the properties of arches and of piers in a series of continuous arches.

In Chapter VII the column analogy is used in the analysis of certain problems in framed bents. This is the easiest field in which to illustrate the principle, but it is not the most important field of its application.

The column analogy has many other uses. It may be applied to closed elastic rings, such as pipes or tunnel sections, to structures having hinges, to computations of deflection. The function of this text, however, is not to exhibit all its applications in mechanics, but rather to show how it may be used as a ready tool in the design of continuous structures of concrete.

The Analogy. Suppose that a structure such as the bent shown in Fig. 24 (*a*) is cut at some section A and the two sides of the cut are rotated with reference to each other through a very small angle ϕ. If

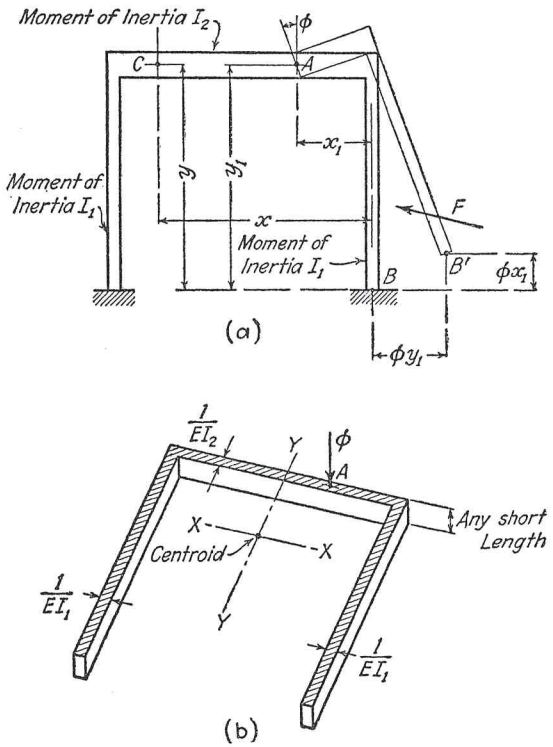

FIG. 24. Rectangular Bent and its Analogous Column.

the foot of one of the columns, B, is free, it will move to position B'. Then

$$\text{Rotation} = \phi$$
$$\text{Horizontal displacement} = \phi y_1$$
$$\text{Vertical displacement} = \phi x_1$$

If the foot of the column is not free to move it will be restrained by some force F which will set up bending moments throughout the structure.

The position and magnitude of the force F must be such as to produce displacements at B equal and opposite to those produced by ϕ.

Let the moment at some section C due to F be m_i. This will produce flexural rotation in a short length of beam at C equal to $m_i\, ds/EI$. This in turn will produce at B

$$\text{Rotation} = m_i \frac{ds}{EI}$$
$$\text{Horizontal displacement} = m_i \frac{ds}{EI}\, y$$
$$\text{Vertical displacement} = m_i \frac{ds}{EI}\, x$$

If, then, B is to remain fixed

$$\int m_i \frac{ds}{EI} = -\phi$$
$$\int m_i \frac{ds}{EI}\, x = -\phi x_1$$
$$\int m_i \frac{ds}{EI}\, y = -\phi y_1$$

Moreover, the values of m_i evidently vary directly as the first powers of x and y (m_i is a linear function of x, y), since, at any point, m_i equals F times the lever arm.

This condition, that m_i is a linear function of x, y, and the three preceding equations are sufficient to determine all values of m_i and hence to determine F.

But we have solved this problem in mathematics before. Consider the short length of column (block) shown in Fig. 24 (*b*). It has the same shape as the front elevation of the bent, but has very small width equal to $1/(EI)$ of the different members of the bent. It is loaded with load ϕ at A.

The fiber stresses at the base of this block are given by the general equation of flexure in a symmetrical section.

$$f = \frac{P}{A} + \frac{M_x}{I_x} x + \frac{M_y}{I_y} y$$

where P is the load on the section.

M_x is the moment of the load along the axis X about the centroidal axis Y.
M_y is the moment along axis Y.
A is the area of the section.
I_x is the moment of inertia of the area along the axis of X about the centroidal axis Y.
I_y is the moment of inertia along axis Y.
x and y are coordinates of any point on the section.

This formula for flexure consists of the familiar formulas $f = P/A$

for a short centrally loaded strut and the beam formula $f = Mc/I$. It is derived from the facts that

(1) f is assumed to be a linear function of x, y.

(2) $\int f\,dA = -P.$ $\qquad (\Sigma V = 0.)$

(3) $\int f\,dAx = -M_x.$ $\qquad (\Sigma M_x = 0.)$

(4) $\int f\,dAy = -M_y.$ $\qquad (\Sigma M_y = 0.)$

If in this particular strut we write m_i instead of f, we could restate these as

(1) m_i is a linear function of x, y.

(2) $\int m_i \frac{ds}{EI} = -\phi.$

(3) $\int m_i \frac{ds}{EI}\, x = -\phi x_1.$

(4) $\int m_i \frac{ds}{EI}\, y = -\phi y_1.$

These are the conditions controlling m_i in the bent, and so the expressions for f in the strut and m_i in the bent are the same. If we can compute f in this strut, we know m_i in the bent.

The above reasoning holds no matter what produces the rotations ϕ and no matter how many of them there are. We can still find the moments necessary to preserve continuity — the indeterminate moments, whence the designation m_i — as fiber stresses on a short strut loaded with loads ϕ and having the same dimensions of cross-section as the bent except that it has widths equal to $1/(EI)$ values of the bent.

The figure shown in (*b*) (Fig. 24), having small widths equal to $1/(EI)$ of the structure, any short length whatever, and otherwise the same dimensions as the bent, is called the analogous column for that bent.

The rotations ϕ, as stated, may be due to any cause whatever. Sometimes they may be actual measurable rotations, as, for example, where it is desired to find the moments produced in a bent or arch by the tipping of an abutment; sometimes they may be imaginary rotations, as where it is desired to find the moment needed to rotate one end of a beam when the other end is fixed (the stiffness of the beam as used in applying the method of moment distribution), or where an imaginary rotation is produced at some point in a structure to produce deflections

corresponding to influence ordinates; in most problems they are due to loads on the structure.

A linear movement without rotation may be produced by two equal and opposite rotations about points on a line normal to the direction of movement. Thus the short black line shown at A, Fig. 25, will take up the position shown at B if rotated about O_1 (ϕ is very small) and then the position shown at C if counter-rotated about O_2. If, then, rotations are represented by loads on the analogous column, linear movements are represented on the analogous column by couples and may be treated as moments about the line of movement.

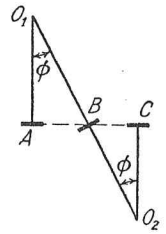

FIG. 25. Linear Displacement Due to Equal and Opposite Angular Rotations.

If the rotations ϕ are due to loads on the structure, they have values

$$\phi = m_s \frac{ds}{EI}$$

where m_s is the moment at any section produced by the loads acting on the structure if cut in any way so that it is statically determinate.

But this is the same as loading the short block in Fig. 24 (*b*) with an intensity of load m_s. To find the indeterminate moments due to loads, then, draw any convenient curve of moments on the structure for those loads, consider these as intensities of pressure on the analogous column, and compute fiber stresses. The total moment at any point is the difference of the moments statically determined, m_s, and the indeterminate moments m_i.

Unsymmetrical Sections. Thus far we have restricted the discussion to a symmetrical section because the flexure formula as usually given is so restricted. A general form* of the formula for flexure is:

$$f = \frac{P}{A} + \frac{M_x'}{I_x'}\,x + \frac{M_y'}{I_y'}\,y$$

where

$$M_x' = M_x - \frac{I_{xy}}{I_y} M_y$$

$$M_y' = M_y - \frac{I_{xy}}{I_x} M_x$$

$$I_x' = I_x - \frac{I_{xy}}{I_y} I_{xy}$$

$$I_y' = I_y - \frac{I_{xy}}{I_x} I_{xy}$$

* For a derivation of this formula, see "The Column Analogy," by Hardy Cross, Bul. 215, Eng. Exp. Sta., Univ. Ill., 1930.

All terms are as defined in the formula for symmetrical sections given above, except

I_{xy} is the product of inertia of the area of the section about the two axes X and Y through the centroid.*

This formula is applicable in the column analogy to unsymmetrical bents and arches in the same way that the more usual formula is applicable to the symmetrical case.

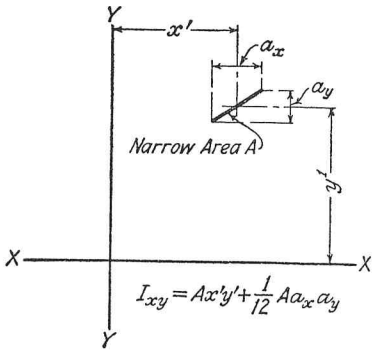

FIG. 26. Product of Inertia of a Narrow Area.

The Indeterminate Force F. In Fig. 24 (a), page 48, F is the indeterminate force needed to produce continuity. It evidently represents changes in the reactions.

Along the line of action of F, the indeterminate moment is zero. It acts, then, along a line corresponding to the neutral axis of the analogous column section for the given loading, where $f = 0$.

Components of F are

$$h_i = \frac{\delta m_i}{\delta y} \quad \text{and} \quad v_i = \frac{\delta m_i}{\delta x}$$

or the rate of change of m_i per unit of vertical or of horizontal distance.

On the analogous column, we have the general formula

$$\frac{\delta f}{\delta y} = \frac{M_y'}{I_y'} \quad \text{and} \quad \frac{\delta f}{\delta x} = \frac{M_x'}{I_x'}$$

In the symmetrical case, of course, this reduces to

$$\frac{\delta f}{\delta y} = \frac{M_y}{I_y} \quad \text{and} \quad \frac{\delta f}{\delta x} = \frac{M_x}{I_x}$$

* The product of inertia of an area about any two axes XX and YY (Fig. 26) is Area × (product of coordinates of its centroid measured from axes XX and YY) + (product of inertia of the area about axes through its centroid parallel to the axes XX and YY.)

$$I_{xy} = Ax'y' + I_{0_{xy}}$$

If the area has very small width then

$$I_{xy} = Ax'y' + \tfrac{1}{12} Aa_x a_y$$

where x', y' are coordinates to the center.

a_x, a_y are projections parallel to the axes. (See Fig. 26.)

The product of inertia about the centroid is positive if the line slopes / (dy/dx is positive), and negative if it slopes \.

Of course, this is a general expression including moment of inertia (two axes coincident) as a special case.

We may, then, find

$$h_i = \frac{M_y}{I_y} \quad \text{or} \quad \frac{M_y'}{I_y'} \quad \text{and} \quad v_i = \frac{M_x}{I_x} \quad \text{or} \quad \frac{M_x'}{I_x'}$$

by the column analogy.

These are changes in the reactions from the static condition assumed and

$$H = h_s - h_i \qquad V = v_s - v_i$$

The intercepts of the indeterminate force F on the centroidal axes are the intercepts of the neutral axis of the beam section.*

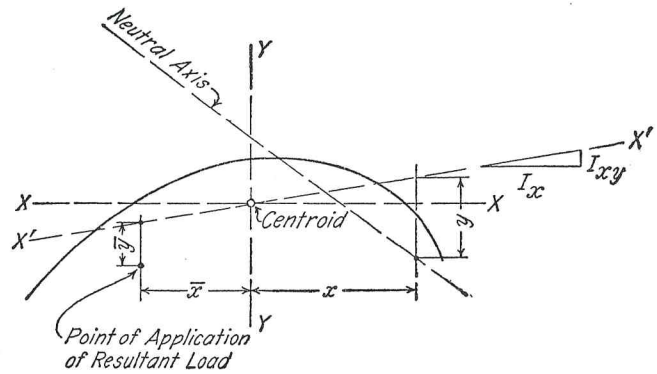

FIG. 27. Neutral Axis — Unsymmetrical Section.

$$x_1 = -\frac{\frac{P}{A}}{\frac{M_x'}{I_x'}} \quad \text{and} \quad y_1 = -\frac{\frac{P}{A}}{\frac{M_y'}{I_y'}} \quad \text{for unsymmetrical sections.}$$

$$x_1 = -\frac{\frac{P}{A}}{\frac{M_x}{I_x}} \quad \text{and} \quad y_1 = -\frac{\frac{P}{A}}{\frac{M_y}{I_y}} \quad \text{for symmetrical sections.}$$

* A general equation for the neutral axis, derived from the above relations (see "The Column Analogy" Bulletin, page 13), which is often very convenient, is

$$\frac{1}{A} + \frac{\bar{x}}{I_x} x + \frac{\bar{y}}{I_y'} y = 0$$

where x and y are coordinates of points on the neutral axis,

$\bar{x}$ and $\bar{y}$ are coordinates of the point of application of the resultant load,

the values x and $\bar{x}$ being measured horizontally from centroidal axis YY, and the ordinates y and $\bar{y}$ being measured vertically from the axis $X'X'$. The axis $X'X'$ is located from its slope I_{xy}/I_x as shown in Fig. 27.

Note that the intensity of stress at the centroid is P/A.

If the resultant load on the section has coordinates x_2, y_2, the intercepts on the centroidal axes x_1, y_1, are given by

$$x_1x_2 = \rho_x^2 \qquad y_1y_2 = \rho_y^{2*}$$

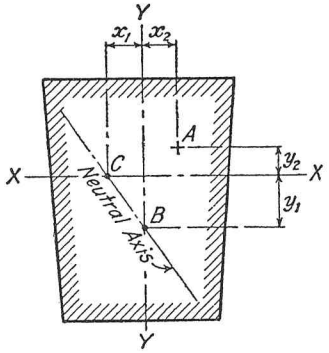

FIG. 28. Neutral Axis — Symmetrical Section.

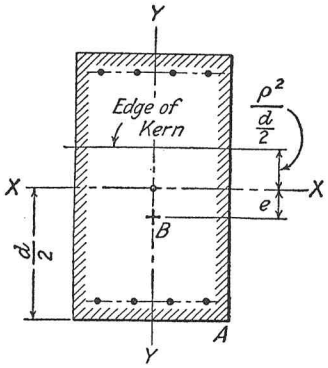

FIG. 29. Kern Relations.

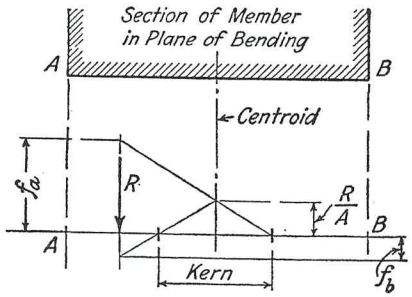

FIG. 30. Graphical Analysis for Eccentric Load.

* **The Kern Relation and Flexure Formulas in Terms of the Kern.** In any symmetrical beam section a load at any point A (see Fig. 28) having coordinates x_2, y_2 will produce zero stress at point B, on the Y axis through the centroid, and at C on the X axis through the centroid if

$$y_1y_2 = \rho_y^2$$

and

$$x_1x_2 = \rho_x^2$$

where ρ_y and ρ_x are the radii of gyration along axes Y and X respectively.

Such expressions often occur in flexural computations and may be referred to as the kern relation between load and point of zero stress. Evidently points B and C define the neutral axis of the section for a load at A.

Such a relation defines the kern of a section, which is the area within which a load must lie if there is to be no tension on the section.

It is not of any use to know very much about the kern; the whole subject has given

Signs of Bending Moments in the Column Analogy. The bending moments in the column analogy are taken as positive when they produce tension on the bottom of a beam or on the inside of an arch or bent. Thus they conform in the case of the beam and arch and in the girders of bents to the usual convention of signs used in design. In the columns of bents, this convention of signs is the same as that used later in the method of moment distribution for the column on the left-hand side of the bent, but it is different in the column on the right-hand side.

Positive rotations are such as would be produced by positive bending moments. It does not seem especially important to try to set up a

rise to much needless mathematical elaboration. It is, however, sometimes useful to know that the flexural formulas may be written in terms of moments about the kern points.

Thus in the reinforced-concrete section shown in Fig. 29 it is desired to find the stress at A due to load at B. It is assumed that B is so located that there is no tension on the section, i.e., all concrete is acting.

Write
$$f_a = \frac{P}{A} + \frac{Pec}{I} = \frac{P}{A}\left(1 + \frac{e\frac{d}{2}}{\rho^2}\right) = \frac{P\frac{d}{2}}{A\rho^2}\left(\frac{\rho^2}{d/2} + e\right)$$

where A and I are taken for the transformed section.

The distance of the kern for face A from the centroid is $\dfrac{\rho^2}{\frac{d}{2}}$

Hence
$$f_a = \frac{P\frac{d}{2}}{A\rho^2}\left(\frac{\rho^2}{d/2} + e\right) = \frac{M_k\frac{d}{2}}{I}$$

where M_k is the moment about the kern point.

We may also write

$$f_a = \frac{P}{A}\,\frac{e_k}{\frac{\rho^2}{x_a}}$$

Where P is the load.

A is the area of the section.

e_k is the eccentricity of the load with reference to the kern point.

$\dfrac{\rho^2}{x_a}$ is the distance of the edge of kern from the centroid.

This expression leads to a graphical construction which is sometimes convenient. Lay off R/A on the centroid. (See Fig. 30.) Draw through this and the kern points to intersect the resultant load. The intercepts on the resultant load are outer fiber stresses for the corresponding kern points.

The kern is sometimes useful where it is known (as is the middle third of a rectangular homogeneous section) or where it is conveniently found. It is sometimes useful in applying the column analogy. It is never essential.

convention of signs for horizontal and vertical forces, their direction nearly always being obvious from the statics of the problem.*

Tabulation of Computations in the Column Analogy. One of the chief advantages of the beam formula is that it provides a definite routine for flexural computations. The computations of the properties of the section are usually tabulated, and by proper arrangement much work may be saved.

In using the column analogy the arrangements of tabulation shown in Figs. 31 and 32 are recommended. If the coordinates x, y and x_1, y_1 are given the proper signs and if the proper sign, according to the convention stated, is given to the static moment m_s, all signs in this table follow automatically.

The steps in the procedure are numbered in the tables: (1) Fill out given properties and loads. (2) Compute derived properties. (3) Find totals. (4), (5) and (6) Correct to centroid; correct for dissymmetry of section, if any; compute whatever values are desired.

The values x, y and x_1, y_1 are taken from any convenient pair of axes in the beginning. Coordinates are to be taken positive upward and to the right.

It is to be noted that the analysis of unsymmetrical sections is not especially more difficult than is that of symmetrical sections; only two additional steps are to be taken. The properties of nearly twice as many members — or elastic areas — will need to be computed in the unsymmetrical sections, however.

Choice of Curve of Moments to Use in Applying the Column Analogy. Any curve of moments which is statically consistent with the loads may be used in applying the column analogy. Some curves of moment are, however, very much more convenient than others. Some typical cases are shown in Fig. 33.

In a bent of very irregular section it may sometimes be found con-

* If anyone wants rules of sign for the changes in reaction, the following will be found convenient in bents and arches:

(a) For horizontal forces, pull at the abutments (tension in the girder of a bent) is positive.

(b) For vertical forces, use the customary convention for shears in girders. (Positive shear is up on the left, down on the right.)

The correct signs for changes in reaction are then automatically determined by the column analogy, and the correct values for the reactions follow algebraically from

$$V = v_s - v_i$$
$$H = h_s - h_i$$

Positive displacements correspond to positive forces. Positive bending moment is positive force times positive distance (distance measured up or to the right from the force to the section).

COLUMN ANALOGY
TABULAR FORM FOR ANALYSIS OF SYMMETRICAL STRUCTURES

Properties of Section											Loads on Section				
(1) Given Properties							(2) Computed Properties				(1) Given			(2) Computed	
							Statical Moments		Products of Inertia		Load	Coordinates of Load		Moments	
Member	Length L	Width $\frac{1}{T}$	Area $\frac{L}{T}=a$	x	y	ax	ay	ax^2+i_x	ay^2+i_y		$p=m_s a$	x_1	y_1	$m_x=px_1$	$m_y=py_1$
(3) Totals			A			$A\bar{x}$	$A\bar{y}$	I_x	I_y		P				
(4) Locate Centroid $\left\{\begin{array}{l}\bar{x}=A\bar{x}/A \\ \bar{y}=A\bar{y}/A\end{array}\right.$				✓	✓			✓	✓						
(5) Corrections to Centroid								$A\bar{x}^2$	$A\bar{y}^2$					$P\bar{x}$	$P\bar{y}$
(6) Subtract Corrections								I_x	I_y					M_x	M_y
(7) Compute moments or forces by formulas	$m_i=\frac{P}{A}+\frac{M_x}{I_x}x+\frac{M_y}{I_y}y$							$M=m_s-m_i$			Intercepts of Indeterminate Force F				
	$v_i=\frac{M_x}{I_x}$							$V=v_s-v_i$			$x_1=-\frac{\frac{P}{A}}{\frac{M_x}{I_x}}$			$y_1=-\frac{\frac{P}{A}}{\frac{M_y}{I_y}}$	
	$h_i=\frac{M_y}{I_y}$							$H=h_s-h_i$							

FIG. 31

COLUMN ANALOGY
TABULAR FORM FOR ANALYSIS OF UNSYMMETRICAL STRUCTURES

| Properties of Section | | |

at the upper joint in (*h*) is a known external moment such as might come from a projecting member not shown in the figure.

In (*j*) the curve of moments for uniform load has been so drawn that there is no moment in the parabolic member. This is possible where both the moment curve and the member have the same shape.

Hinges in the Column Analogy. Hinges are not common in structures of reinforced concrete. Some concrete arches have been built

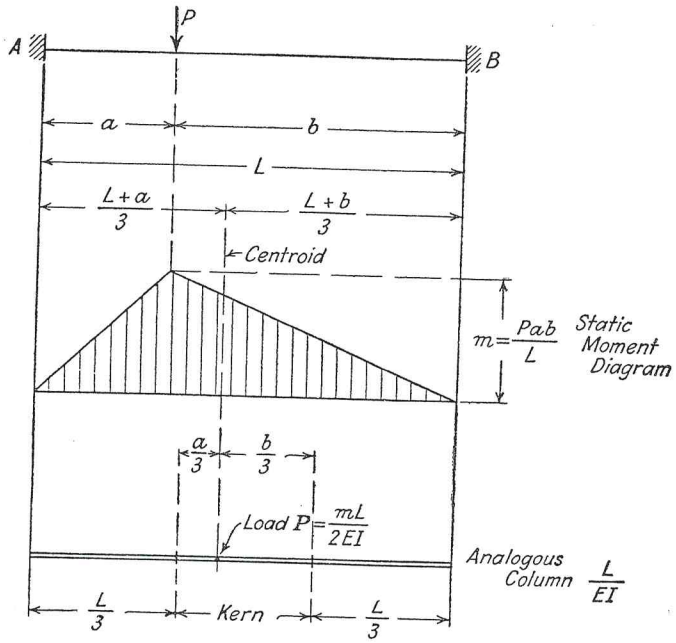

FIG. 34. Column Analogy — Beam of Constant Section.

with two hinges and a few with three, the hinges being sometimes of metal, sometimes of stone and sometimes merely places of predetermined weakness of the concrete section. Some engineers favor this type of construction.

The differential areas $(ds)/(EI)$ used in the column analogy represent the rotation per unit of moment in a short length. If a moment is constantly applied to a frictionless hinge, the rotation would be unlimited. In the column analogy, then, the area of a hinge may be taken as infinite.

Illustrations of the Column Analogy. The following simple illustrations of the column analogy are given here. Others will be found throughout the book, especially in:

Chapter V. Applications to beams of varying section.
Chapter VII. Applications to bents.
Chapter IX. Applications to arches.

(*a*) *End Moments in Beams of Constant Section.* As an illustration of the column analogy let it be required to compute the end moments on the fixed-ended beam shown in Fig. 34 — assuming constant moment of inertia. Consider the moment curve shown, produced by the load P on a beam simply supported at its ends. Any static moment curve such as one due to a cantilever over length a or b might equally well have been used.

In this case, then, the analogous column section is a strip of length L and width $1/(EI)$. Both E and I are assumed constant in this case and may be given a relative value of unity. The column section thus becomes simply $A = L$, and the load is $P = +mL/2$. Since $m_s = 0$

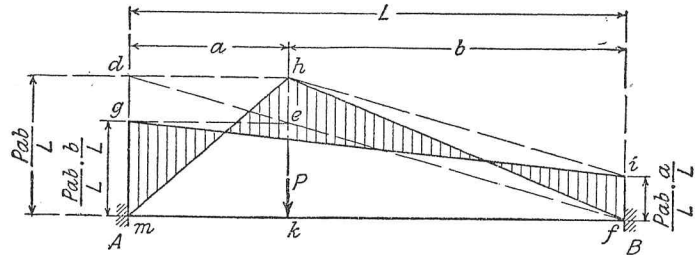

FIG. 35. Graphical Construction for Fixed-end Moment.

at both A and B for the simple-beam moment curve assumed, the end moments follow directly from the kern-moment relation as

$$M_a = \frac{6M_k}{AL} = \frac{6\,\dfrac{mL}{2}\,\dfrac{b}{3}}{LL} = m\frac{b}{L} \qquad M_b = m\frac{a}{L}$$

where $m = Pab/L$, the simple-beam moment at the load. Subtracting these from the static moment at the end (zero) gives

$$M_a = -m\frac{b}{L} \qquad M_b = -m\frac{a}{L}\,*$$

With the aid of very simple integration this formula is sufficient for the determination of fixed-end moments on prismatic beams for all conditions of loading. Stated in words, it follows that, for uniform

* This construction may be made graphically as shown in Fig. 35. It scarcely needs explanation.

section, the moment at one end of a fixed-ended span due to a concentrated load is equal to the moment which would exist under that load if the beam were simply supported, times the proportional distance of the load from the other end of the span. For a combined or multiple loading the separate moments may be obtained for each loading and added together.

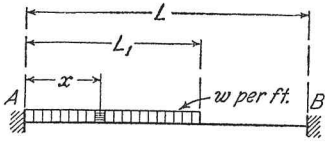

FIG. 36. Beam with Fixed Ends—Uniform Load over Part of Span.

Applying the above formula to the case of uniform load extending over only a portion of the span, as in Fig. 36

$$M_a = \int_0^{L_1} \frac{w\,dx \cdot x(L-x)}{L} \cdot \frac{L-x}{L} = -\frac{wL_1^2}{12L^2}(6L^2 - 8LL_1 + 3L_1^2)$$

$$M_b = \int_0^{L_1} \frac{w\,dx \cdot x(L-x)}{L} \cdot \frac{x}{L} = -\frac{wL_1^3}{12L^2}(4L - 3L_1)$$

For full uniform load the moment diagram is a parabola and therefore $f = P/A$ corresponds to

$$M = -\frac{P}{A} = -\frac{2/3\ 1/8\ wL^2L}{L} = -1/12\ WL\ ^*$$

where $W = wL$.

Fig. 38 shows a beam of uniform section, fixed at A and hinged at B, subject to a single concentrated load P. The hinge has an elastic area of ∞ and hence both the centroid and kern point (for end A) of the infinite column section lie at the hinge. Whence

$$M_a = -\frac{M_k x}{I_0} = -\frac{\frac{mL}{2}\,\frac{L+b}{3}\,L}{\frac{1}{3}LL^2} = -m\frac{L+b}{2L}$$

This value is more conveniently found by the principle of moment distribution as later explained.

(*b*) *End Moments Due to Rotation — Moment Distribution.* As a problem useful in the study of moment distribution and further illustrating the application of the column analogy consider a beam of uniform section fixed at one end B and subject to a unit rotation at the other end A, Fig. 39. This rotation or angle change is equivalent to a load

* The area of a parabola is two-thirds the area of the circumscribing rectangle as indicated in Fig. 37. This figure also contains other useful data for some simple geometrical figures.

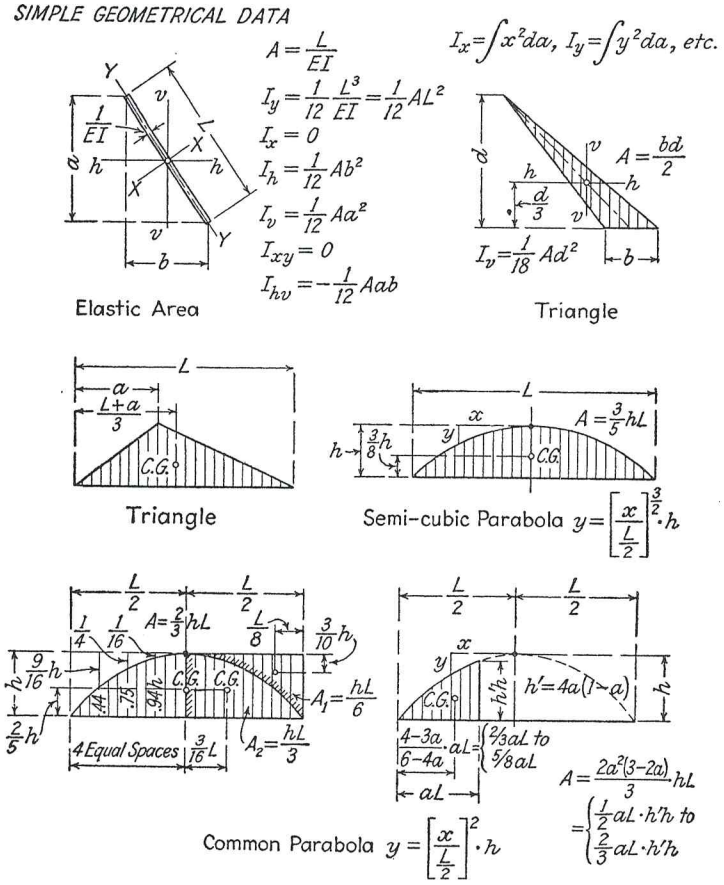

FIG. 37. Useful Geometrical Data.

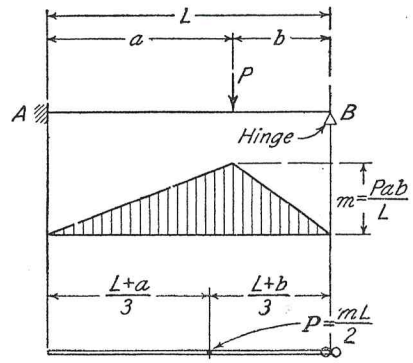

FIG. 38. Column Analogy — Beam Hinged at One End.

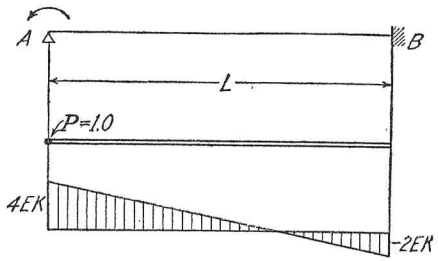

FIG. 39. Stiffness of Beam — Constant Section.

unity on the analogous column. For rectangular sections, a convenient form of the flexure formula is:

$$f = \frac{P}{A}\left(1 \pm \frac{6e}{d}\right)$$

Whence $$M = \frac{P}{A}\left(1 \pm \frac{6e}{L}\right) = \frac{1}{L/EI}\left(1 \pm \frac{6 \times \frac{L}{2}}{L}\right) = E\frac{I}{L}(1 \pm 3)$$

Writing K for I/L

$$M_a = 4EK \qquad M_b = -2EK = -\tfrac{1}{2}M_a$$

From this it is seen that if B is made a hinged joint as in Fig. 40, and its moment released, one-half of it will be carried over to A with opposite sign. That is, for hinge at B:

$$M_a = \frac{M_k x}{I_0} = \frac{1LL}{\frac{1}{3}\frac{L}{EI}L^2} = \frac{3EI}{L} = 3EK$$

This shows that a beam fixed at one end is three-fourths as stiff — offers three-fourths as much resistance to rotation — as a beam fixed at both ends.

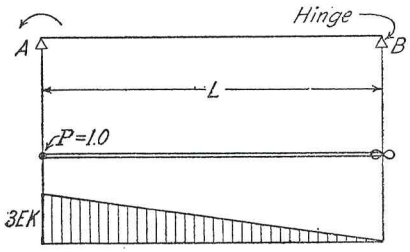

FIG. 40. Stiffness of Beam — Far End Hinged.

(c) *Static Moment Diagrams in Column Analogy.* Fig. 41 is a further illustration of the column analogy showing the application of three different static moment curves to the same numerical problem. The formula $M = m(a/L)$ is, of course, sufficient for writing the end moments:

$$M_a = \frac{10 \times 5 \times 15^2}{400} = -28.15 \quad M_b = \frac{10 \times 5^2 \times 15}{400} = -9.35$$

The solution therefore has value only as an illustration of the use of different static moment diagrams — diagrams due to the given load-

ing which satisfy statics — in the column analogy. The final moment diagrams were constructed in each case by combining the assumed moment diagram with that due to the end restraint. The results are of course the same in all solutions.

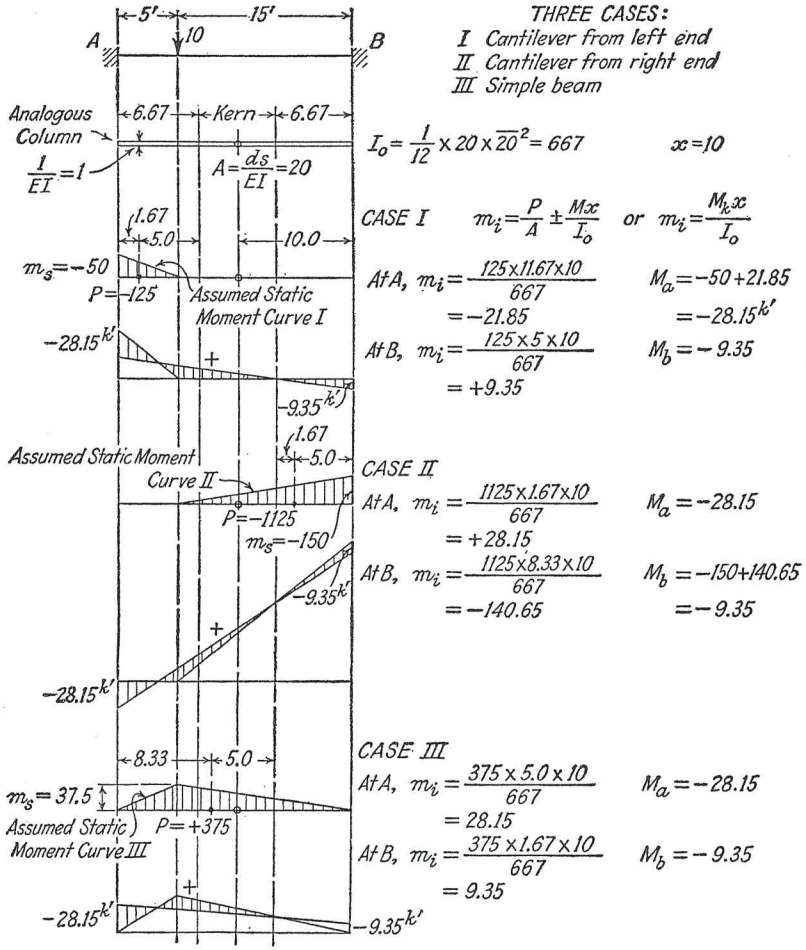

FIG. 41. Column Analogy — Fixed-ended Beam.

(d) *Properties of Beams in which Depth is Not Constant.* The column analogy is particularly useful in studying beams having varying section. As an illustration of method consider the fixed beam with the shape shown in Fig. 42 and neglect the fact that ordinary flexural relations would not hold near the reentrant angles. For a constant width the

relative I values will be taken to vary as the cube of the depth, or simply as 1 and 8. Using a cantilever moment diagram the loading and properties of the $1/I$ curve are as shown (noting that the moment of inertia of each section about its own centroidal axis is $i_0 = 1/12\ aL^2$, and the moment of inertia of each section about the common centroid is $I_0 = i_0 + ax^2$).

In the ordinary problem where the depth of haunch varies gradually, it is sufficient to compute the a and P ($= ma$) values over short lengths

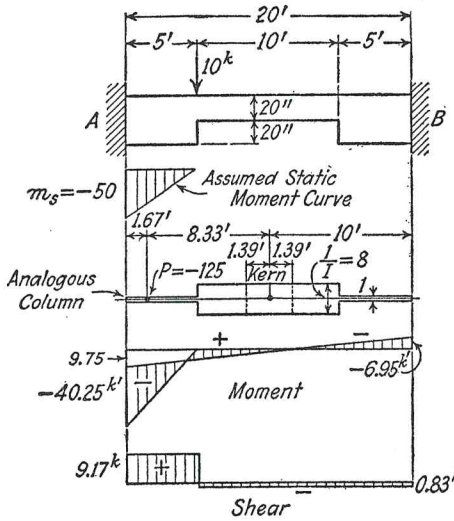

a	x	ax^2	i_0	$\bar{m}$	$\bar{m}a$
2@5=10	7.5	560	21	25	125
80	0	0	667	0	0
A = 90		560	688		125

Kern* $e_k = \frac{I_0}{Ax} = \frac{1248}{90 \times 10} = 1.39'$

$M_a = -50 - \frac{-125 + 9.72 \times 10}{1248} = -50 + 9.75 = -40.25^{k'}$

$M_b = 0 + \frac{-125 \times 6.94 \times 10}{1248} = -6.95$

$V_a^{**} = \frac{-6.95 + 150 + 40.25}{20} = 9.17^k$

$V_b = 10 - 9.17 = 0.83$

FIG. 42. Column Analogy — Beam of Varying Section.

of the haunch, getting the total resultant load and its moment and the elastic properties of the section. Integration will almost never be necessary, as the precision increases rapidly as the number of divisions is increased.

A beam symmetrically haunched is shown in Fig. 43 and is analyzed for end moments due to a uniform load and also for end moments due to a rotation at one end.

In Fig. 44 a beam unsymmetrically haunched is shown, and this is analyzed for end moments due to rotations at the ends.

(*e*) *Beams Assumed Infinitely Stiff Near Their Ends.* The problem often occurs of analyzing a frame consisting of a series of beams and

* There is no advantage in using the kern in this computation. It is used here simply because it was used in the case of the beam of constant section.

** The shear is found here by taking moments about point B. We might also find it as $v_s - v_i$ in the column analogy.

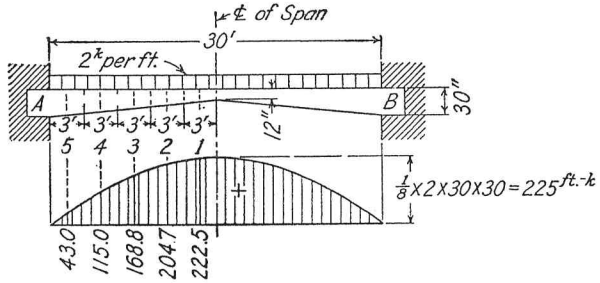

Section	Length in ft.	d in ft.	x	a	$ax^2 + i_x$	m_s	P		
1	3	1.15	±1.5	1.97	4.43 / 1.47	+222.5	+438		$a = 12\frac{L}{d^3}$
2	3	1.45	±4.5	0.98	19.80 / 0.73	+204.7	+200		$a = \frac{L}{d^3}$ in this
3	3	1.75	±7.5	0.56	31.50 / 0.42	+168.8	+94		computation.
4	3	2.05	±10.5	0.35	38.65 / 0.26	+115.0	+40		Hence b=12 ft.
5	3	2.35	±13.5	0.23	41.90 / 0.17	+43.0	+10		E=1
				4.09	139.33		+782		
			Multiplied by	2	2				
				8.18	278.7				

$m_{i_a} = m_{i_b} = \frac{+782}{4.09} = +191^{ft\text{-}k}$

$M_a = M_b = m_s - m_i = 0 - (+191) = -191^{ft\text{-}k}$

If support "A" rotates one unit:—
Find the moment necessary to give unit rotation by applying a unit load at "A" on the analogous column

Then $m_{i_a} = \frac{1}{8.18} + \frac{(-15)(-15)}{278.7} = +0.929$

$m_{i_b} = \frac{1}{8.18} + \frac{(-15)(+15)}{278.7} = -0.687$

m_a = Moment necessary to produce unit rotation at end "A".
m_b = Moment at end "B", due to restraint, when end "A" is rotated one unit; or, m_b for any given rotation at end "A", when "B" is fixed will be

$= \frac{-0.687}{+0.929} \times m_a$

FIG. 43. Column Analogy — Beam Symmetrically Haunched.

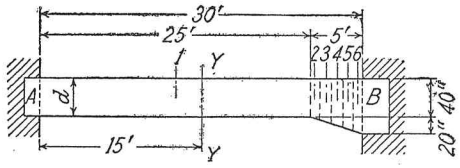

Section	Length in ft.	d in ft.	x	a	ax	$ax^2 + i_x$				
1	25	3.33	− 2.5	8.15	−20.4	51 425				
2	1	3.50	+ 10.5	0.28	+ 2.9	31 0				
3	1	3.83	+ 11.5	0.21	+ 2.4	28 0				$a = 12\frac{L}{d^3}$
4	1	4.16	+ 12.5	0.17	+ 2.1	27 0				$E = 1$
5	1	4.50	+ 13.5	0.13	+ 1.8	24 0				
6	1	4.83	+ 14.5	0.11	+ 1.6	23 0				
			− 1.06	9.05	− 9.6	609 10				
				9.05		599				

(a)—For Unit Rotation at "A" — apply unit load on analogous column at "A";

then: $m_i = \frac{1}{9.05} + \frac{(-13.9)(-13.9)}{599} = +0.433$, moment necessary for unit rotation at "A";

and $m_i = \frac{1}{9.05} + \frac{(-13.9)(+16.1)}{599} = -0.263$, moment at far end "B", due to restraint.

(b)—For Unit Rotation at "B"—apply unit load on analogous column at "B";

then: $m_i = \frac{1}{9.05} + \frac{(+16.1)(+16.1)}{599} = +0.544$, moment necessary for unit rotation at "B";

and $m_i = \frac{1}{9.05} + \frac{(+16.1)(-13.9)}{599} = -0.263$, moment at far end "A", due to restraint.

In (a), then, for any given rotation or moment at end "A":

$$m_b = \frac{-0.263}{+0.433} \times m_a, \text{ and}$$

In (b), then, for any given rotation or moment at end "B":

$$m_a = \frac{-0.263}{+0.544} \times m_b$$

FIG. 44. Column Analogy — Beam Unsymmetrically Haunched.

columns on the assumption that there is no deformation within the joint.* This is equivalent to assuming that $1/(EI) = 0$ beyond the faces of intersection. Let us find the end moments for uniform and for

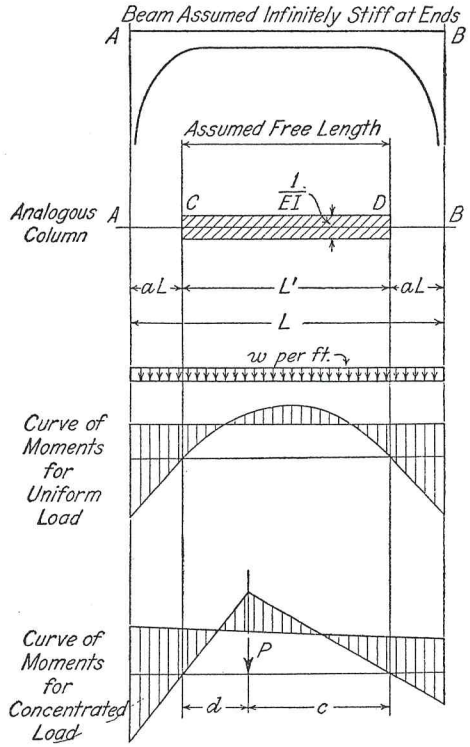

$$A = \frac{L'}{EI}$$

$$I_o = \frac{1}{12}\frac{L'}{EI}L'^2$$

$$x = \frac{L}{2}$$

For unit rotation at A:

$$M_a = \frac{1}{A} + \frac{x^2}{I_o}$$

$$= \frac{1}{\frac{L'}{EI}} + \frac{\frac{L}{2}\cdot\frac{L}{2}}{\frac{1}{12}\frac{L'}{EI}L'^2}$$

$$= \frac{EI}{L'}\left(1 + 3\left(\frac{L}{L'}\right)^2\right)$$

$$M_b = \frac{1}{A} - \frac{x^2}{I_o}$$

$$= \frac{EI}{L'}\left(1 - 3\left(\frac{L}{L'}\right)^2\right)$$

$$\frac{M_b}{M_a} = \frac{1 - 3\left(\frac{L}{L'}\right)^2}{1 + 3\left(\frac{L}{L'}\right)^2}$$

$$= \text{approximately } -\frac{1}{2}(1 + 3a)$$

for small values of a

FIG. 45. Column Analogy — Beam Very Stiff Near Ends.

concentrated loads, and the end moments at each end, for unit rotation of one end, for the beam shown in Fig. 45.

It is not worth while to make an analysis of this case to find the moments due to load. At sections C and D they may be found as $\frac{1}{12}wL'^2$ for uniform load, and for concentrated load they are $\frac{Pcd}{L'}\frac{c}{L'}$ and $\frac{Pcd}{L'}\frac{d}{L'}$ respectively. The values follow from formulas already given for beams fixed at ends. To find moments at A and at B add to the moments just found the corresponding shears at A and at B respectively multiplied by aL.

The analyses for unit rotation follow methods explained above.

* See curves for this case in Chapter V.

(*f*) *Column Analogy Applied to a Hinged Bent.* In Fig. 46 is shown a bent hinged at the base with a single concentrated load on top and a wind load on the side. The problem is taken for illustration of method; for practical work, gravity loads and wind loads should be treated separately.

Note that the moment of inertia of the hinges is zero and their elastic areas infinite. Hence the total elastic area is infinite, the mo-

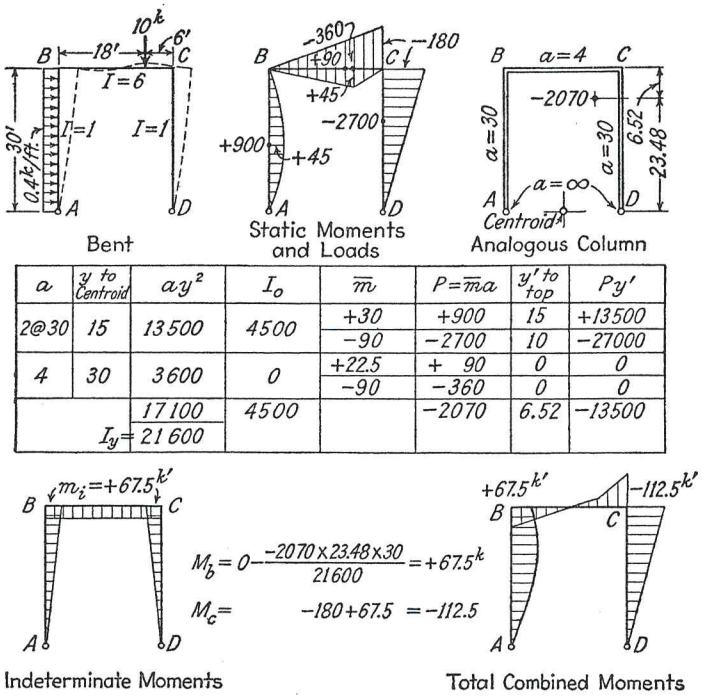

a	y to Centroid	ay^2	I_o	$\overline{m}$	$P=\overline{m}a$	y' to top	Py'
2@30	15	13500	4500	+30	+900	15	+13500
				−90	−2700	10	−27000
4	30	3600	0	+22.5	+ 90	0	0
				−90	−360	0	0
		17100	4500		−2070	6.52	−13500
	I_y=	21600					

FIG. 46. Column Analogy — Rectangular Bent, Hinged at Base.

ment of inertia about a vertical axis is also infinite, and the horizontal centroidal axis passes through the hinges.

The curve of moments selected for the vertical load is that on the girder treated as a simple beam. The curve of moments for the horizontal loads is taken for an arch with hinges at A, B and D.

(*g*) *Other Illustrations of the Column Analogy.** Assume the rectangular bent shown in Figs. 47 and 48. Let the loads be a vertical load of 10^k on the top and a horizontal load of 6^k uniformly distributed

* These and some other examples in this chapter are taken from Bul. 215, Eng. Exp. Sta., Univ. Ill.

along one side. It is desired to draw separate moment curves for the two cases of loading.

Assume as convenient axes a vertical through the center of b and a horizontal through the center of aa. Tabulate length L, moment of inertia I, horizontal coordinate of centroid x and vertical coordinate of centroid y for each of the members a, b and a.

Also record the elastic loads and their centroids. For the load of 10^k, treating the girder as a simple beam, we have the moment curve shown, average moment $+ 66.7/2$, area loaded 3, and hence $P = +33.3 \times 3 = +100$. The centroid is as shown, and $x = -1.7$, $y = +6$. Whence $M_x = (-1.7) \times (+100) = -170.0$ and $M_y = (+6) \times (+100) = +600$.

For the horizontal load draw the curve of moments for the column as a cantilever. Average moment $- 36/3 = -12$; area loaded $= 6$. Hence $P = (-12) \times 6 = -72$. Also $x = -15$, $y = -3$. $M_x = (-15) \times (-72) = +1080$ and $M_y = (-3) \times (-72) = +216$.

Compute a, a_x, a_y, $ax^2 + i_x$, $ay^2 + i_y$ for each member. The centroidal moment of inertia (i_x and i_y) equals $1/12\, a \times$ (projection along the axis)^2. Find the totals.

Reducing to the centroid, $\bar{x} = 0$, $\bar{y} = +18/15 = +1.2$. Find $A\bar{x}^2$, $A\bar{y}^2$, $P\bar{x}$, $P\bar{y}$ and subtract.

The intercepts of the neutral axis for the two conditions of loading are now found as $x_1 = -\dfrac{P/A}{M_x/I_x}$ and $y_1 = -\dfrac{P/A}{M_y/I_y}$. For the vertical load compute $h_i = M_y/I_y = +2.1$, and for the horizontal load compute $v_i = M_x/I_x = +0.37$. The neutral axes are then plotted, and on them the original curves of moments are drawn to the scale of distance. For the vertical load plot for static moments $66.7/2.1 = 31.7$ ft.; for the horizontal loads, $36/0.37 = 97.3$ ft.

In Fig. 49 is shown a reinforced-concrete bent having a monitor. The dead load on the roof is assumed uniform at 1000 lb. per horizontal foot.

In this case both load and structure are symmetrical, and there is no need to compute moment of inertia about the axis of Y. The axes are taken on the vertical center line and through the center of members aa.

The moment areas and their centroids for the different members have been computed separately by breaking them up into trapezoids and parabolas.

The same procedure is followed as in the preceding problem. The neutral axis, however, is horizontal. $h_i = M_y/I_y = +11.1$. Intercept of neutral axis $y_1 = -\dfrac{P/A}{M_y/I_y} = -3.92$. The rise of the pressure line is $200/11.1 = 18.00$ ft.

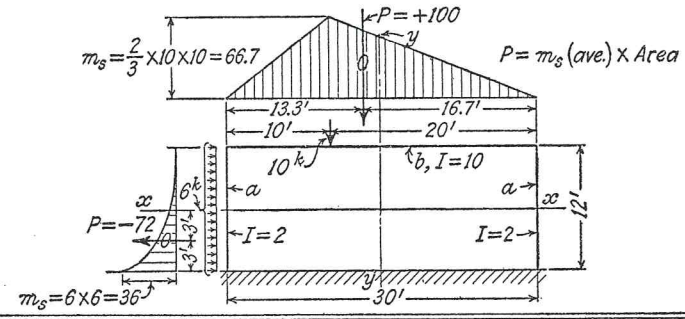

Properties of the Section											Elastic Load									
Given					Computed						Vertical					Horizontal				
Member	Length	I	x	y	Elastic Area	Statical Moments		Products of Inertia			Given			Computed		Given			Computed	
					a	ax	ay	ax^2+i_x	ay^2+i_y	$axy+i_{xy}$	P	x	y	M_x	M_y	P	x	y	M_x	M_y
a	12	2	−15	0	6	−90	0	1350	0											
								0	72											
b	30	10	0	+6	3	0	+18	0	108											
								225	0											
a	12	2	+15	0	6	+90	0	1350	0											
								0	72											
Correct to					15	0	+18	2925	252		+100	−1.7	+6	−170	+600	−72	−15	−3	+1080	+216
Centroid −			0	+1.2	A			0	21.6					0	+120				0	−86.4
								2925 = I_x	230.4 = I_y					−170 = M_x	+480 = M_y				+1080 = M_x	+302.4 = M_y
								2925	230.4		+100			−170	+480	−72			+1080	+302.4
											$\frac{P}{A}$ = +6.7			v_i = −0.058	h_i = +2.10	$\frac{P}{A}$ = −4.8			v_i = +0.37	h_i = +1.30
											Intercepts	x_i +116.0	y_i −3.2				x_i +13.0	y_i +3.7		

FIG. 47. Column Analogy — Rectangular Bent. (See Fig. 48.)

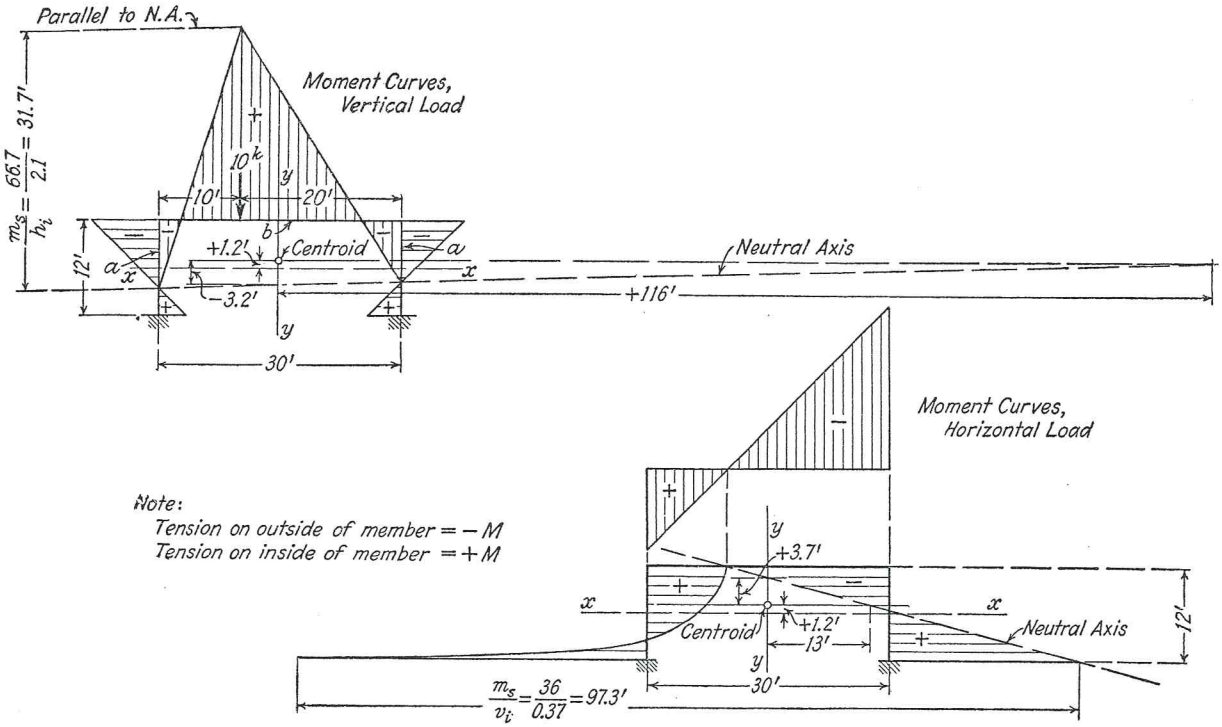

FIG. 48. Results from Fig. 47.

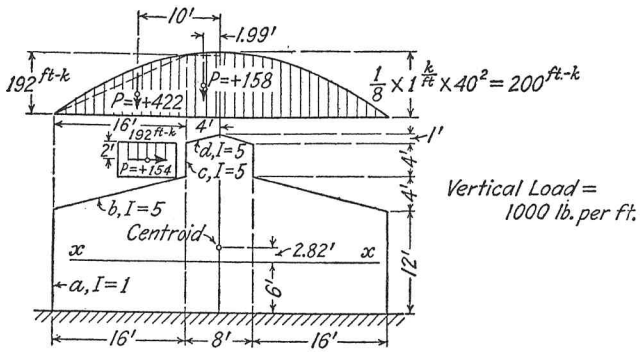

Properties of Section							Elastic Load			
Member	Length	I	a	y	ay	ay^2+i_y	m_s,(av.)	P	y	M_y
a	12.0	1	12.0	0	0	0 144	0			
b	16.5	5	3.3	+8	+26.4	211 4	+128	+422	+8.5	+3585
c	4.0	5	0.8	+12	+9.6	115 1	+192	+154	+12	+1850
d	4.1	5	0.8	+14.5	+11.6	168 0	+197	+158	+14.5	+2290
Correct to Centroid			16.9	+2.82	+47.6	643 134		+734		+7725 +2070
			A=16.9		I_y=	509		+734		+5655
							$\frac{P}{A}$=	+43.4		=M_y
							$h_i=\frac{M_y}{I_y \frac{P}{A}}$=			+11.1
							$y_i=-\frac{A}{h_i}$=		−3.92	

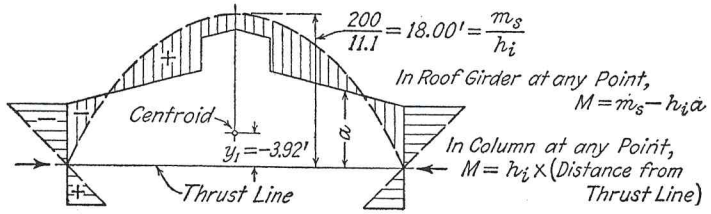

FIG. 49. Column Analogy — Bent with Monitor.

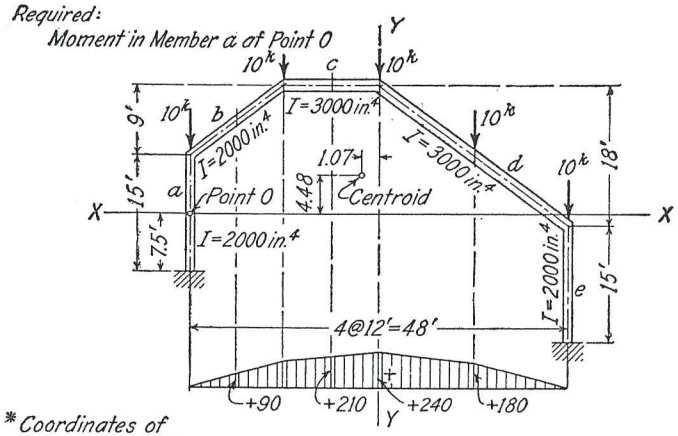

* Coordinates of Point 0 − −24.0 0

	1	2	3	4	5	6	7	8	9	10	11	12	13	14	15	16
Member	Length	I in 1000 in.4	a	x	ax	ax^2+i_x	y	ay	ay^2+i_y	$axy+i_{xy}$	m_s	v_s	h_s	P	M_x	M_y
a	15	2	7.5	−24	−180	4320 0	0	0	0 140	0 0						
b	15	2	7.5	−18	−135	2430 90	+12	+90	1080 51	−1620 + 68	+90	+15		+675	−10800	+9110
c	12	3	4.0	− 6	−24	144 48	+16.5	+66	1090 0	− 397 0	+210	+ 5		+840	−4800	+13860
d	30	3	10.0	+12	+120	1440 480	+ 7.5	+75	562 270	+ 900 − 360	+180	−10		+1500	+13200	+14850
e	15	2	7.5	+24	+180	4320 0	− 9.0	−67.5	608 140	−1620 0						
	A=		36.5		−39	13272		+163.5	3941	−3029				+3015	−2400	+37820
				−1.07		42	+4.48		732	− 175					−3230	+13510
				−22.93	I_x=	13230 2530	*4.48	I_y=	3209 614	−2854	I_{xy}				+ 830 −21620	+24310 − 180
					I_x'=	10700		I_y'=	2595					M_x'=	+22450	+24490

Moment at Point 0:

m_s = $= 0$ M_y'

$$m_i = \frac{3015}{36.5} + \frac{(+22450)(-22.93)}{10700} + \frac{(+24490)(-4.48)}{2595} = -7.8^{k'}$$

M = $= +7.8^{k'}$

FIG. 50. Column Analogy — Unsymmetrical Bent.

The signs of the intercepts of the neutral axis can usually be found by inspection, since the neutral axis lies on the side of the centroid opposite to the load.

In Fig. 50 is shown an unsymmetrical bent subjected to vertical loads. The tabulation of elastic properties and of elastic loads follows the procedure already explained.* The elastic moments may also be conveniently computed as previously explained. The trial axes are taken as the vertical halfway between columns and the horizontal through the center of member a.

The correction to the centroid also follows the procedure already explained.

The correction for dissymmetry is made as follows:

for I_x in column (6) write $I_{xy} \cdot \frac{I_{xy}}{I_y} = (-2854)\left(\frac{-2854}{3209}\right) = 2530$

for M_x in column (15), write $M_y \cdot \frac{I_{xy}}{I_y} = (+24310)\left(\frac{-2854}{3209}\right) = -21620$

for I_y in column (9), write $I_{xy} \cdot \frac{I_{xy}}{I_x} = (-2854)\left(\frac{-2854}{13230}\right) = 614$

for M_y in column (16), write $M_x \cdot \frac{I_{xy}}{I_x} = (+830)\left(\frac{-2854}{13230}\right) = -180$

Subtract these corrections to get I_x', M_x', I_y' and M_y'.

The bending moment at any point, such as O, may now be found as $M = m_s - m_i$, as shown.

C. Geometry of Influence Lines

Much of the material in this book will be found to be new. The fundamental principles, however, are very old — as old as geometry. Most of the classical methods of analysis of indeterminate structures were developed for use in continuous structures of steel and are still useful in these problems. But the problems of continuous steel structures are usually relatively simple, the structures being commonly indeterminate in the first or second degree. Methods which are convenient in the analysis of such structures become unwieldy when applied to continuous structures of reinforced concrete, which are quite often indeterminate to the fifteenth or twentieth degree. A few classical methods are included below for subsequent use.

* The values given for member d in columns 14, 15 and 16, and values dependent on these, differ from those given on page 40 of the Bulletin. The values given in the Bulletin involve a numerical error.

The Principle of Virtual Work. Assume any structure acted upon by loads and reactions and let it be required to determine the deflection Δ in the direction ab of any point a. Consider first the stretch — call it δ — of any differential fiber. Now if we consider a unit hypothetical resistance to motion at a to produce a stress u in the fiber, then the external work would be $1 \times \Delta$, and the internal work will be $u \times \delta$; then

$$\Delta = u\delta$$

Each fiber produces its independent deflection and hence

$$\text{Total } \Delta = \sum u\delta$$

Reference has been made to the stretch of a differential fiber. We might, without affecting the argument, have referred equally well to the shearing distortion of a differential cube, to the rotational distortion of a differential cylinder, to internal angular displacement or to any internal distortion.

Also, it is possible to deal with external rotation at a instead of translation. The hypothetical unit force is then a unit moment. Then

$$\text{Rotation at } a = \sum u\delta$$

in which u is the stress in each small particle due to a unit moment at a, and δ is the distortion actually existing in the particle.

Summarized, the principle of virtual work states that displacement, linear or angular, at any point in a structure is equal to the sum of the product of the internal distortions by imaginary internal resistances to such distortion produced by a unit hypothetical force of displacement, i.e., a unit force at the point and in the direction of the displacement. The reactions to this hypothetical force of displacement will fix the reference by which the displacement may be measured.

The Reciprocal Theorem. Suppose we wish to find the displacement or rotation at any point A, of a structure, due to a unit force acting at some other point B on the structure. To do this by virtual work we could, theoretically, proceed as follows:

(*a*) Find the stress s on each separate fiber of the structure due to the load. The deformation in that fiber is

$$\delta = \frac{sL}{AE}$$

(*b*) Find the stress u in each fiber due a unit resistance to the movement at A.

$$\text{Then the movement at } A = \sum u\delta = \sum \frac{suL}{AE}$$

Now reverse the process. Suppose a load at A corresponding to the previous movement at A — that is, a horizontal load if the movement at A, which we were discussing above, was horizontal, a vertical load if it was vertical, a couple if it was a rotation. We want the movement at B corresponding, as just explained, to the former load at B. To apply virtual work:

(*a*) Find unit stresses as above due to load at A. They will have the values u found above. Find $\delta = uL/AE$.

(*b*) Find stresses for unit resistance to movement at B. They will have the values s found above.

Then the movement at $B = \Sigma \dfrac{suL}{AE}$

But this is the same expression as before.*

The argument has been stated in terms of longitudinal distortion of fibers, but it would be the same if stated in terms of shears or torsions.

Hence, if " displacement " is interpreted in a general sense as either linear or angular, and " load " in a general sense as either force or mo-

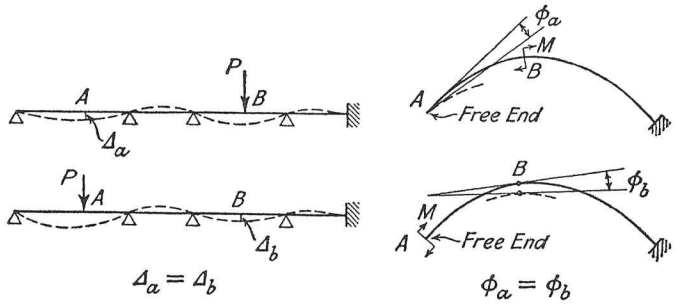

FIG. 51. Reciprocal Relation of Displacements.

ment, then in any structure the displacement at A due to a load at B has the same value as the displacement at B due to the same load at A, provided that both at A and B the force and the displacement are of the same nature, linear displacement corresponding to force along its line of action, and rotation corresponding to moment. This is illustrated in Fig. 51.

This important theorem, which may be called the general theorem of reciprocal displacements, leads at once to a general method of drawing influence lines.

* If the physical properties of the structure are not changed by the new arrangement of loading, that is, if Hooke's Law holds, the value of E will be the same in the two cases. The principle deduced here is limited to structures which follow Hooke's Law. This limitation is not of much, or any, practical significance, however.

Influence Lines as Deflected Structures. Suppose we want the influence line for some function such as the moment at A in the continuous beam shown in Fig. 52 (*a*). We could find it as follows:

(*a*) Place an imaginary hinge at A.

(*b*) Place a unit vertical load at any point B.

(*c*) Find the relative rotation of the beam axis on the two sides of the hinge.

(*d*) Find the relative rotation of the beam axis on the two sides of the hinge due to a unit couple acting on each side of the hinge. Fig. 52 (*b*).

(*e*) Then $M_a = \dfrac{\text{rotation at hinge } A \text{ due to unit load at } B}{\text{rotation at hinge } A \text{ due to unit couples at } A}$.

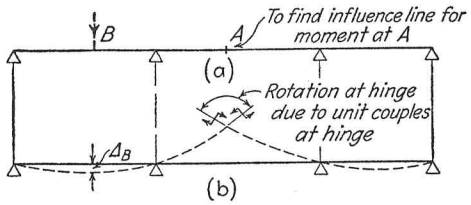

FIG. 52. Influence Line as a Deflected Structure.

But, by the reciprocal theorem, rotation at hinge A due to unit load at B = vertical deflection at B due to unit couples at A.

Hence $M_a = \dfrac{\text{vertical deflection at } B \text{ due to unit couples at } A}{\text{rotation at } A \text{ due to unit couples at } A}$.

Or: Moment at A due to unit vertical load at B in the structure without a hinge = vertical deflection at B due to such couples at hinge A, in the hinged structure, as would produce unit rotation at A.

We have used the moment as an illustration. In general, produce a unit displacement corresponding to the stress for which the influence line is desired. It will be seen that, by so doing, the structure may be made to draw its own influence line.

This is the general principle of influence lines, or Müller-Breslau's principle. It is one of the most beautiful and useful in the theory of structural analysis.

Sketching Influence Lines. Influence lines, then, are deflected structures due to a unit deformation in the structure corresponding to the stress function for which the influence line is to be drawn. Thus, in the simplest case, the influence line for a reaction can be drawn by raising the reaction point one unit. In other words, if we let the re-

action react through one unit of distance, vertical deflections of the structure will be influence ordinates for the reaction due to vertical loads on the structure, horizontal deflections of the structure will be influence ordinates for horizontal loads on the structure and rotations of the tangents will be influence ordinates for moment loads on the structure.

For example, it is desired to draw the influence line for moment at the center of the beam shown in Fig. 53 (*a*). In order to draw an influence

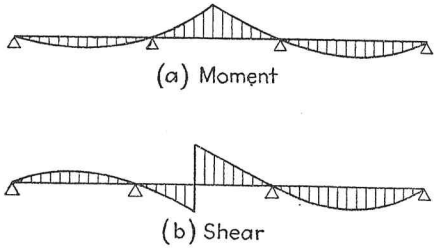

FIG. 53. Sketching Influence Lines. Shear and Moment in a Continuous Beam.

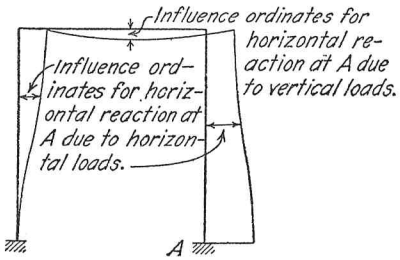

FIG. 54. Sketching Influence Lines. Horizontal Reaction for a Rectangular Bent.

line for moment we allow the moment to produce a unit rotation of the two sides of the section considered. If then we cut this beam at its center and rotate the two sides of the cut with reference to each other, it is easy to see that the structure will take somewhat the shape shown in the diagram.

In Fig. 53 (*b*) is shown the influence line for shear in a continuous beam. In Fig. 54 are shown influence lines for horizontal reaction at the right base of a rectangular bent.

The whole subject of influence lines, their construction and use, is discussed in Chapter VIII, where many more illustrations of this principle will be found.

CHAPTER IV

MOMENT DISTRIBUTION

The Effect of Continuity on Bending Moments. A beam continuous over any number of supports will in general have bending moment throughout its entire length due to any loading. If only one span of a series such as *BC* in Fig. 1 is loaded, reactions either positive or negative will be produced, except in a very special case, at all supports. The moment diagram is a combination of the curve of moments due to the

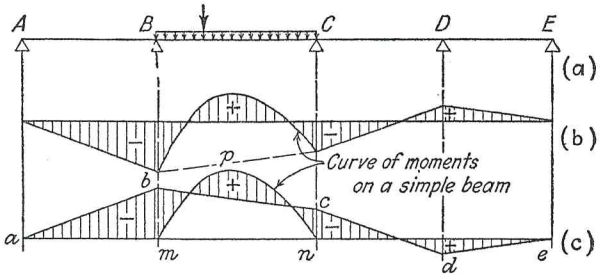

FIG. 1. Moment Diagram — Continuous Beam.

loads on the single span treated as a simple beam and the diagram due to the moments at the supports. It may be sketched directly on a horizontal base line as in (*b*), or as the combination of the simple beam curve *mpn* and that due to continuity *abcde* as in (*c*). The simple-beam moment curve depends only upon the loads. The moments due to continuity depend also on the angular rotation at the supports and therefore upon the relative elastic properties of the beams.

Moment Distribution a Physical Conception. The general method of moment distribution now to be presented is applicable to all problems in the analysis of continuous frames with members straight or curved, with constant or varying section, due to vertical or transverse loading, to settlement of supports, or distortions resulting from temperature changes.

The method in general involves the calculation of moments at the ends of all beams in a frame under certain artificial conditions of restraint, then a redistribution of unbalanced moments by arithmetical proportion when the artificial restraints are removed.

A. The Direct Method

The method is used almost exclusively in this text in the analysis of continuous girders and frames. Let us first approach the method without any mathematics. Suppose we wish to draw the curve of moments on the beam shown in Fig. 2.

Imagine that joint B is temporarily restrained against rotation. Find the end moments on the two fixed-end beams for this condition. We have assumed values for these more or less at random.

The joint at B is unbalanced; there is a moment 50 ↺ on one side and a moment 80 ↻ on the other side, the unbalanced moment

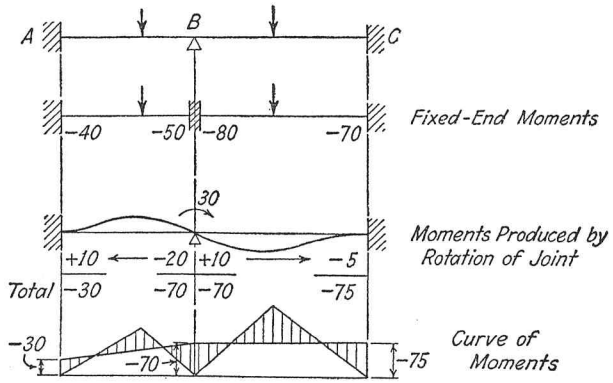

Fig. 2. Moment Distribution.

being 30 ↻. When released, then, this joint will turn until the total moments on the two sides balance. The 50 will be increased by some amount — say 20 — and the 80 will be decreased by 10, so that

$$50 + 20 = 80 - 10$$

or

$$50 + a = 80 - (30 - a)$$

Evidently the sum of the changes in moment on the two sides of the joint must be 30.

We can conveniently say, then, that the unbalanced moment is "distributed" between the connecting beams in some way.

Now the condition which fixes the ratio of distribution of the unbalanced moment is the necessity, evident in the picture, that the two beams must rotate at B through the same angle. The unbalanced moment must be distributed, then, in proportion to the moment necessary to rotate each beam through a given angle at B.

If we use the term stiffness to mean the moment needed at the end of

a beam which is supported at one end and rigidly fixed at the other end to produce unit rotation of this end, we can now say that the unbalanced moment is distributed to the connecting beams in proportion to their "stiffness." Note carefully this definition of stiffness — it is pictured in Fig. 3 — because it implies no relative linear displacement of the two ends of the beam. The method then is restricted for the present to those cases in which there is no relative movement of the joints of the structure.

Referring again to Fig. 2, it is evident that, when a negative moment rotates the beam AB at B, a positive moment is produced at A as shown by the curvature of the beam there. Also, when a positive moment ro-

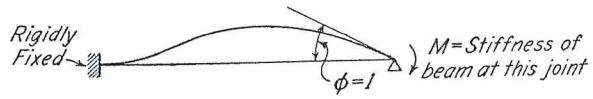

Fig. 3. Stiffness of a Beam.

tates the beam BC at B, a negative moment is produced at C as shown by the curvature. The picture cannot be drawn in any other way.

Hence the distribution of moments at one end of a beam produces a moment of opposite sign to the distributed moment at the other end of the beam. We may say, then, that fractions of the distributed moments are "carried over" to the other ends of the beams with opposite signs. We have assumed in this problem that one-half is carried over.

We may now add the original moments, the distributed moments and the moments carried over to get the total moments at the supports. These are

At A $\quad -40 + 10 = -30$

At B $\quad -50 - 20 = -80 + 10 = -70$

At C $\quad -70 - 5 = -75$

This solves the problem so far as indeterminacy is concerned, and we can draw the curve of moments and compute shears and reactions by statics.

Fixed-end Moments, Stiffness and Carry-over Factor. In order to solve this problem definitely we need to be able to compute the fixed-end moments, the stiffness of the beams and the carry-over factors. Note carefully that up to this point we have introduced no theory as to the properties of the material of which the beams are made nor any theory of bending distortion. In determining the above constants, however, we must consider these matters.

These constants may be determined by the column analogy either for

Stiffness varies as I/L This value is often represented by K

Carry-Over Factor $= \frac{1}{2}$

Fixed-End Moments:—

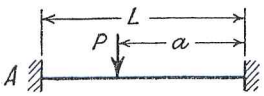

At A, due to a concentrated load,

$$M' = M\frac{a}{L},$$

where M is the moment which would exist under the load on a beam simply supported.

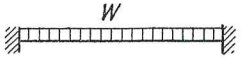

For uniform load

$$M' = \frac{1}{12}WL$$

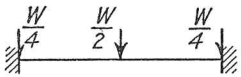

For loads nearly uniform

$$M' = \frac{3}{4}\frac{WL}{12}$$

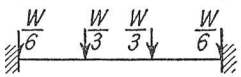

$$M' = \frac{8}{9}\frac{WL}{12}$$

Or, in general, for uniform loading and n equal panels:

$$M' = \left(1 - \frac{1}{n^2}\right)\frac{1}{12}WL$$

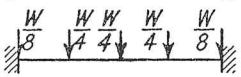

$$M' = \frac{15}{16}\frac{WL}{12}$$

For triangular loading

$$M' = \frac{1}{12}WL\,(1 \pm 20\%).$$

The moment is increased 20% over $\frac{1}{12}WL$ at the heavily loaded end, and decreased 20% at the other end.

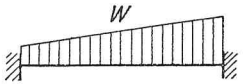

For trapezoidal loading

Use combination of uniform and triangular loading.

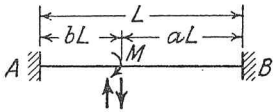

Moment load

For an approximate solution:

Substitute a couple with short arm and add moments due to elements; or use formulas

$$M_a' = Ma(1-3b) \qquad M_b' = Mb(1-3a)$$

Partial loading

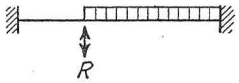

(1) Introduce a false reaction R.
Draw curve of moments and find R by methods to be explained.
Remove R.
Add moment curves.

OR

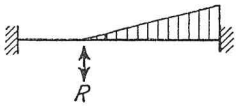

(2) Substitute a series of concentrated loads.

OR

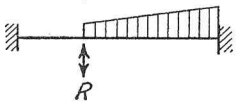

(3) Use calculus.

$$M' = L^2\int wx^2(1-x)\,dx$$

and $L^2\int wx(1-x)^2\,dx$

where xL is the distance of the differential load $wL\,dx$ from either end, and w may be either constant or itself a function of x.

FIG. 4. Fixed-end Moments — Prismatic Beams.
(See also Fig. 5.)

GENERAL CASE

Fixed Ends
Any Loading

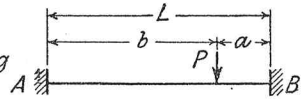

$$M_A' = M\frac{a}{L} = \frac{Pab}{L}\frac{a}{L}$$

This general formula may be applied by the process of summation to all irregular cases.

A′ Hinged
B′ Fixed
Any Loading

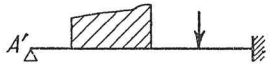

Find M_A' and M_B' for ends fixed
Then $M_{B'}' = M_B' + \frac{1}{2}M_A'$

SPECIAL CASES

Coefficients of WL W = Total Load L = Span Length

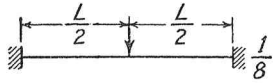

$\frac{1}{8}$

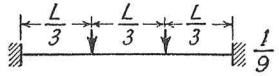

$\frac{1}{9}$

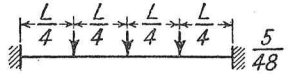

$\frac{5}{48}$

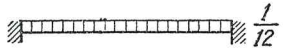

$\frac{1}{12}$

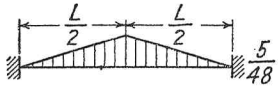

$\frac{5}{48}$

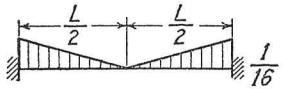

$\frac{1}{16}$

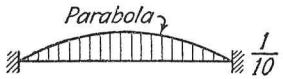

$\frac{1}{10}$

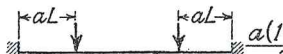

$\frac{a(1-a)}{2}$

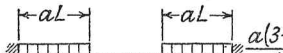

$\frac{a(3-2a)}{12}$

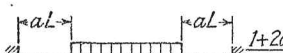

$\frac{1+2a-2a^2}{12}$

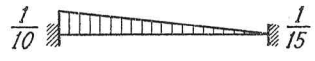

$\frac{1}{10}$ $\frac{1}{15}$

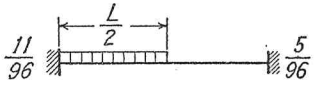

$\frac{11}{96}$ $\frac{5}{96}$

$\frac{a(6-8a+3a^2)}{12}$ $\frac{a^2(4-3a)}{12}$

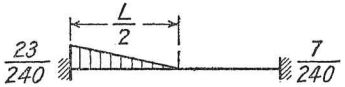

$\frac{23}{240}$ $\frac{7}{240}$

$\frac{a(10-10a+3a^2)}{30}$ $\frac{a^2(5-3a)}{30}$

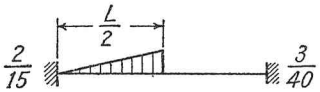

$\frac{2}{15}$ $\frac{3}{40}$

$\frac{a(10-15a+6a^2)}{15}$ $\frac{a^2(5-4a)}{10}$

$\frac{1}{10}W_1L$, $\frac{1}{12}W_2L$

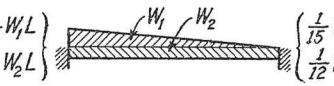

$\frac{1}{15}W_1L$, $\frac{1}{12}W_2L$

$M_{W_1}+M_{W_2}$

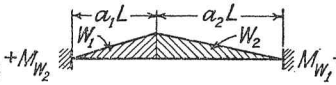

$M_{W_1}+M_{W_2}$

$M_{W_1}-M_{W_2}$

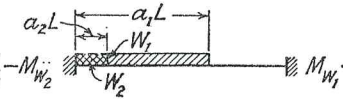

$M_{W_1}-M_{W_2}$

FIG. 5. Fixed-end Moments — Prismatic Beams.
(See also Fig. 4.)

prismatic beams or for beams of varying section. Such determinations are shown in Chapter III and in Chapter V.

For the present we will confine the discussion to prismatic beams — beams of constant section throughout. The relations of Figs. 4 and 5 are summarized here for reference.

The General Method for Prismatic Beams. In introducing the method we used a beam of two spans. Consider now a beam of three spans, Fig. 6. We will first consider joints B and C restrained against rotation. Suppose that the fixed-end moments are as shown, the stiffness ratios are 1 : 3 : 2, and all carry-over factors are 1/2. First balance joint B, that is, distribute the unbalanced moment 20 to the

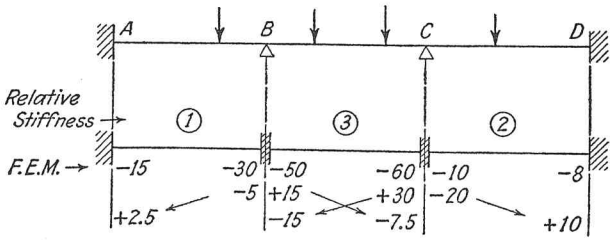

FIG. 6. Moment Distribution — Three Spans.

two beams in the ratio 1 : 3. Then balance joint C, that is, distribute the unbalanced moment 50 to the two beams in the ratio 3 : 2.

Both joints are now balanced except for the fact that we have some moments to carry over. Carry over, then:

$$\tfrac{1}{2}\,5 = 2.5 \qquad \tfrac{1}{2}\,15 = 7.5 \qquad \tfrac{1}{2}\,30 = 15 \qquad \text{and} \qquad \tfrac{1}{2}\,20 = 10$$

Just now we are paying little attention to signs, which will be fully discussed later.

Joint B now has an unbalanced moment of 15, and joint C an unbalanced moment of 7.5.

We may repeat this process indefinitely. Evidently there will soon be nothing of importance to distribute. Then add up all values at each joint.

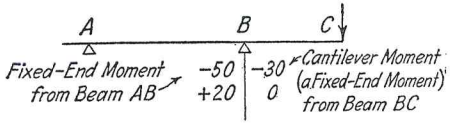

FIG. 7. Moment Distribution — Cantilever.

Now this procedure applies no matter how many supports there are in the beam. If the joint is a free end, we still distribute to the connecting beams, but in such a case there is only one connecting beam.

If we have a cantilever end, we distribute the unbalanced moment between the adjoining beam and the cantilever. In Fig. 7 we distribute

the unbalanced 20 between AB and BC. But no moment is needed to rotate the end of the cantilever at B; it has no stiffness. The unbalanced moment is distributed 20 to AB and 0 to BC.

Simple Examples. Now follow through in detail the solution shown in Fig. 8.

(1) Consider all supports as joints held against rotation. The moments at the ends of the loaded span are then fixed-end moments: $-1/12\,WL = -20^{k'}$.

(2) One at a time release these unbalanced moments — that is, allow the joints to rotate freely — and distribute them to the connecting members in proportion to I/L.

At the left -20.0 released throws $+20.0$ into this end of the beam as there is no other member at the joint. At the second joint the un-

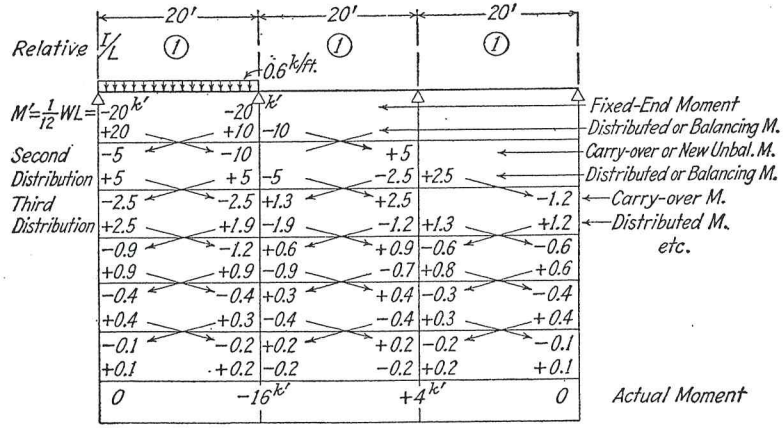

FIG. 8. Moment Distribution.

balanced moment (the difference between the fixed-end moments on the two sides of the joint) is also -20.0. When this is released, it will be divided equally to the two beams, since the I/L values are the same, $+10.0$ on the left and -10.0 on the right, the signs being so chosen as to balance the joint. If we use the usual convention of signs for bending moments, as we are doing here, the joint will be balanced when the total moment is the same in both value and sign on the two sides of the joint. A full discussion of signs follows on pages 92–95.

At the second interior joint and at the right end, the moment is zero and no rotation is required.

(3) Rotation of one end of a member, the other end remaining fixed, will produce at the fixed end a moment equal to one-half of the moment

"distributed" to this member by rotation, and of opposite sign, as explained.

In the problem it will be noticed that all the joints are now balanced, and the total moments thus far determined — 0, −10, 0 and 0 — are

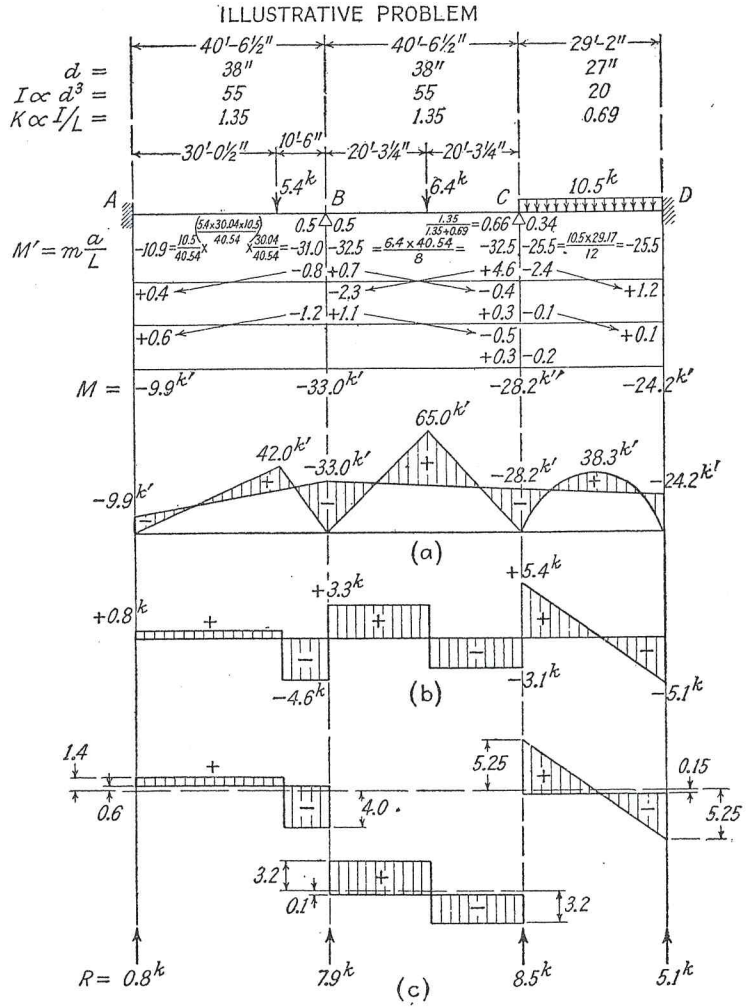

FIG. 9. Moment Distribution — Moment and Shear Diagrams.

the actual moments except for the portion carried over to the other end of the beam in each case of rotation. In the first span when −20.0 was released at the left end, one-half of opposite sign or −10.0 was

carried over to the other end. When the right end received a moment of +10.0, one-half of opposite sign or −5.0 was carried over to the left end. These moments must now be balanced and a portion carried over as before.

(4) Evidently any joint which is once balanced will be unbalanced only by the moments coming in from other joints and these only need further distribution. The series converges rapidly and may be continued as far as desired.

Summing up the moments on either side of the joints after the second release, the results are 0, −15.0, +2.5 and 0. The third approximation is 0, −15.6, +3.8 and 0. Either is probably sufficiently accurate; the final moments are found to be 0, −16.0, +4.0 and 0.

In Fig. 9 is shown another simple case. The relative I values have been taken as proportional to the cube of the depth d. (See page 5.) The relative I/L values follow, and for convenience the ratio of the I/L of one span to the sum of the two values at the joint is written adjacent to the supports. Joints A and D being assumed fixed remain so throughout, one-half of the released moments at the adjacent supports being carried over to the fixed ends in each case, or finally adjusted at the end of the solution as later illustrated in Fig. 21, page 100. The signs of the balancing moments follow automatically so as to balance the joints as explained above and as further discussed later.

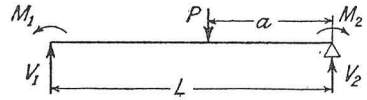

FIG. 10. Shears in Continuous Beams.

The moment diagram, if desired, may be drawn by combining the end moments with the separate static moment curves. The shear at either end of a span may be computed by taking moments about the other support. Thus, as illustrated in Fig. 10, $V_1 = (M_1 - M_2 + Pa)/L$, the signs being best determined by inspection.

Applying this to Fig. 9, the shears in the three spans, as shown in (b), are:

$$V_1 = \frac{9.9 - 33.0 + (5.4 \times 10.5)}{40.54} = 0.8 \qquad \text{By subtraction } V_2 = 4.6$$

$$V_1 = \frac{33.0 - 28.2 + (6.4 \times 20.27)}{40.54} = 3.3 \qquad V_2 = 3.1$$

$$V_1 = \frac{28.2 - 24.2 + (10.5 \times 14.58)}{29.17} = 5.4 \qquad V_2 = 5.1$$

Or preferably the uniform shear due to the difference in the end moments may be combined with the simple-beam shears, the increase being

on the side of the greater moment. This is illustrated in Fig. 9 (*c*). The reactions follow as the sum of the shears on two sides of the support as given at the bottom of the figure.

The Effect of Columns in the Analysis. The method as just stated may be used also in cases where the girders are supported on columns. No modification is necessary in order to do this if we neglect for the present the question of signs.

Consider the frame shown in Fig. 11. Assume that the fixed-end moments are as shown and that the relative stiffness values of the

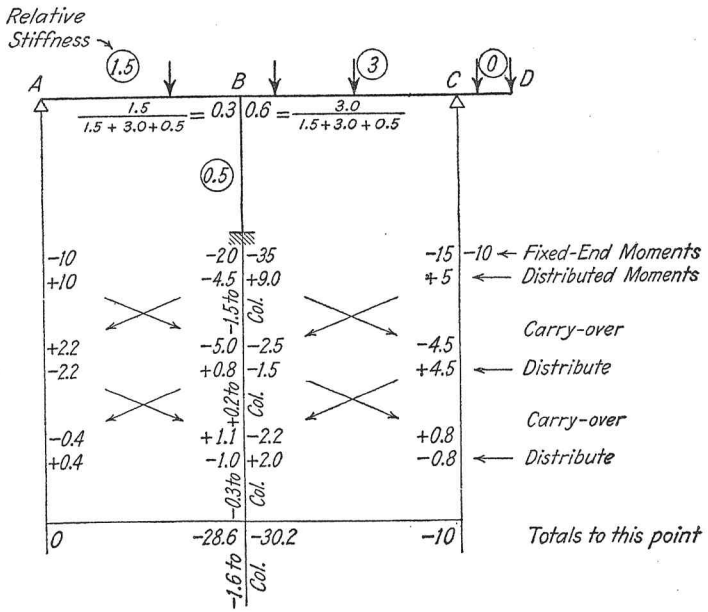

FIG. 11. Moment Distribution — Girders Continuous with Column.

members are as represented in circles. The members are assumed to be prismatic, so that all carry-over factors are 1/2. For convenience, the distribution factors at B may be written as indicated at the support, 0.3 to BA and 0.6 to BC.

For the fixed-end moments all joints are unbalanced. We first distribute all unbalanced moments to the members connecting at the joint in proportion to the stiffness of those members.

At A distribute 10 to the only member connecting, AB.

At B distribute 15 to the three connecting members, in the ratio

1.5 : 0.5 : 3. Then 1.5/5 15 goes to BA; 0.5/5 15 goes to the column; and 3/5 15 to girder BC.

At C distribute 5 to CB and CD in the ratio 3 : 0, all of it going to CB.

For the present let us take for granted the signs of the moments in the columns. The signs of girder moments are so written as to make the girder totals more nearly alike in sign and value on the two sides of each joint.

Carry over the distributed values, one-half with opposite sign in each girder. We have not done so in the column because it would confuse the diagram.

Now again distribute and carry over.

Again distribute and get the totals to this point. Note that the process should be stopped after a distribution so that the statics of the solution will be correct.

Two important points should be noted here:

(*a*) There is no need to compute the moments at the tops of the columns each time in such a case because we can get them as the difference between the moments at the ends of the connecting girders.

(*b*) The solution here given assumes that the girder does not move longitudinally.

Check on Moment Distribution. The correct solution of any problem in continuity must satisfy the requirements of statics and the conditions of geometry; moreover, a solution which does satisfy these requirements must be correct.

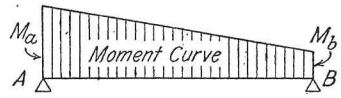

FIG. 12. Check on Moment Distribution — Moment Areas.

It is easy to see whether statics is satisfied by a solution by applying $\sum M = 0$, but it is not evident whether continuity is satisfied.

Continuity is satisfied in those cases where members of uniform section are involved and there is no movement of the joints if, in each member at a joint,

$$M_a + \tfrac{1}{2}M_b \text{ is proportional to } K = \frac{I}{L}\,*$$

* This relation may be deduced from area moments and in several other ways. By area moments, the rotation at A (Fig. 12) is the shear due to the moment curve as a load times $1/(EI)$

$$\phi_a = \frac{(M_a + \tfrac{1}{2}M_b)L}{3EI}$$

Since ϕ is the same for all members meeting at A

$$M_a + \tfrac{1}{2}M_b \text{ is proportional to } \frac{I}{L}$$

For a more general check for cases where the members are not of uniform section, see page 119.

Where

M_a is the change from the fixed-end moment at the end of the member under consideration.

M_b is the change from the fixed-end moment at the other end of the member.

K is the relative I/L value of the member.

Note carefully that the values of M_a and M_b here are changes from the fixed-end moments (both ends fixed) on the beams, not total moments. The signs of $M_a + \frac{1}{2}M_b$ should be opposite on opposite sides of the joint.

Fig. 13 shows the application of this check to the solution of the problem shown in Fig. 11.

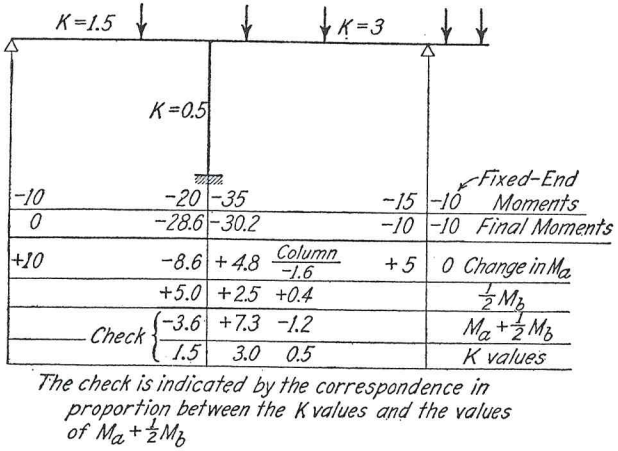

FIG. 13. Check on Moment Distribution Applied to Fig. 11.

Signs for Moments. One of the most prolific sources of error in analyses is the signs. Some system for them which is as nearly as possible fool-proof is desirable.

There are two possible conventions of signs for moments at the end of a member:

(*a*) The first, which deals with the internal moments or bending moments, calls a moment positive when it produces tension on a designated side of the member. In ordinary design of beams, a bending moment is taken as positive if it produces tension on the bottom of the beam. In columns there is no standard sign for bending moments; we have used below the same convention as for beams when the column is looked at from the right-hand side of the sheet. In the column analogy, bending moment is taken as positive when it produces tension on the inside of the elastic ring (bent, arch, culvert).

(*b*) The second, which deals with the external moments or statical moments, calls a moment positive when it tends to rotate a member or a joint in a certain direction.* Evidently we must specify which joint we are talking about; at the end we are presumably referring to the joint at that end, but at the center of a beam the moment under this system of signs would be positive or negative according to which end of the beam is designated.

Of these two conventions, the first is that of the designer — it indicates on which side of the member tensile reinforcement is needed. It is desirable to adhere to it where the results are to be used for design purposes. Where the value of the moment and not its sign is what is wanted, however, as in wind-stress analyses where the sign of the moment depends on the direction of the wind, or where the values of the moments are not to be used for design purposes, as in computing secondary stresses, or where the analysis is relatively complicated, as in the determination of the exact distribution of moments in a Vierendeel girder, the second convention of signs will be found more convenient.

In this text the following conventions of signs are used:

(*a*) In the analysis of frames for design, the bending moment is positive when it tends to sag the beam; the same convention is used for bending moments in columns if the column is looked at as design drawings are ordinarily read.

(*b*) In the column analogy bending moment is taken as positive when it produces tension on the inside of the elastic ring — arch, bent, culvert.

(*c*) In analyses for wind stresses, in the computation of secondary stresses, and in general where the sign of the moment is not important, end moments are taken as positive if they tend to rotate the joint at that end in a clockwise direction.

In most of the problems in the chapter the designer's convention of signs for bending moments has been used. To facilitate the use of this convention, the following rules are given here:

(1) For girder moments use the same convention of signs as is used in design — positive moment sags the beam and negative moment humps the beam.

(2) Use this same convention of signs for the moments in columns, turn-

* Usually in using the method of slope-deflection the end moment is taken as positive when it tends to produce clockwise rotation of the joint at that end; but many also use the convention which states that the end moment is positive when it tends to produce clockwise rotation of the member. Apparently everyone agrees that the positive sign shall be taken with clockwise — not anticlockwise — rotation.

ing the sheet of paper to look at the columns from the right-hand side of the sheet, as notes on a column are ordinarily read.

(3) Write moments to the left of column at the top of the column and to the right of the column at the bottom of the column.

(4) A joint is balanced when the sum of the moments on the two sides of the joint — on the right and on the left side as the piece of paper is ordinarily held — are alike both in value and in sign.

All four of these rules should be clearly understood and strictly followed. It is worth while to stop here and examine their basis.

It is desirable to preserve the convention of signs ordinarily used in the design of the girders, these being the members chiefly affected by

Fig. 14. Moment Distribution — Signs of Bending Moments in Girders.

moments. Evidently, if this convention is used, the moments at the ends of the girders balance when they are alike both in value and in sign, as shown in Fig. 14.

Rules (1) and (4) having been thus fixed for the girder moments, it is convenient to preserve them for the column moments. If we use this same convention of signs in the columns when they are looked at as they

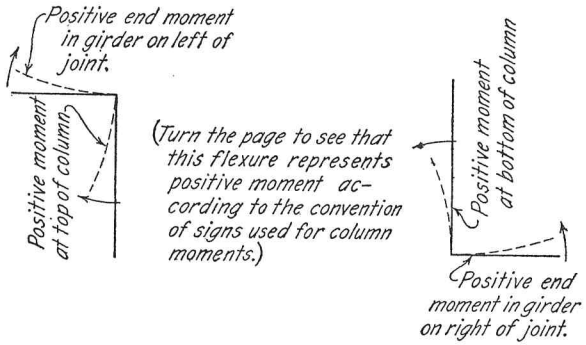

Fig. 15. Moment Distribution — Designer's Convention for Signs of Bending Moments.

are ordinarily read, we see that a positive end moment at the top of the column tends to rotate the joint in the same direction as does a positive end moment in the girder on the left of the joint, and that a positive end moment at the bottom of a column tends to rotate the joint in the same direction as does a positive end moment in the girder on the right of the joint. See Fig. 15.

It follows from the figure that, in order to apply rule (4) to joints where there are columns, the moments in the columns should be written to the left of the joint at the top of the column and to the right of the joint at the bottom of the column.

Usually the signs of the bending moments in the columns need no consideration during the procedure of moment distribution because these moments are actually got by subtracting the girder moments at the end of the distribution. The direction of flexure of the column is then easily visualized.

Correct Signs for Distributed Moments. If the above convention of signs is used, there is only one way in which the signs of the distributed moments can possibly be written so as to balance the joint, that is, so that the sum of the moments on the two sides of the joint will be the same in both value and sign. All distributed moments on one side of the joint will be positive; all those on the other side negative.

These signs are so chosen as to make the totals on the two sides of the joint equal by decreasing the larger total of fixed-end moments where the totals are of like sign or by tending to reverse the signs of both totals when these signs are opposite. But we need no instructions about it, since there is only one way to write these signs and have the totals equal.

As illustrations, consider the joints shown in Fig. 16. Fixed-end moments have been assumed, and for convenience equal stiffnesses are assumed in all connecting members. The fixed-end moments are written next to the member in each case, then the distributed moment, then the total. The moments in the columns have been written parallel to the columns, those in the girders parallel to the girders.

In (*a*) the unbalanced fixed-end moment is 30, and this is distributed 15 to each side of the joint with signs opposite to the original moments. In (*b*) the unbalanced moment is +10 on the left of the joint, and is distributed as −5 to each member. In (*e*) the unbalanced moment is 90 and distributes +30 to the left and −30 to each of the two members whose moments are written on the right side of the joint. In (*l*) the unbalanced moment is 30 and distributes four ways: −7.5 to each of the two members whose moments are written on the left (thus reversing the originally unlike signs) and +7.5 to the two on the right side of the joint.

Observe that the total of the moments on two sides of the joint — right and left, looking from the bottom of the page — are alike in all cases both in value and in sign.

Arrangement of Computations in the Analysis of Frames. It seems important that the computations be put directly on a diagram of the structure. Column moments should be written parallel to the columns

and girder moments parallel to the girders; this avoids any confusion in them. Ordinarily the girder moments will be written below the girders, but where the girders rest on columns it is convenient to write

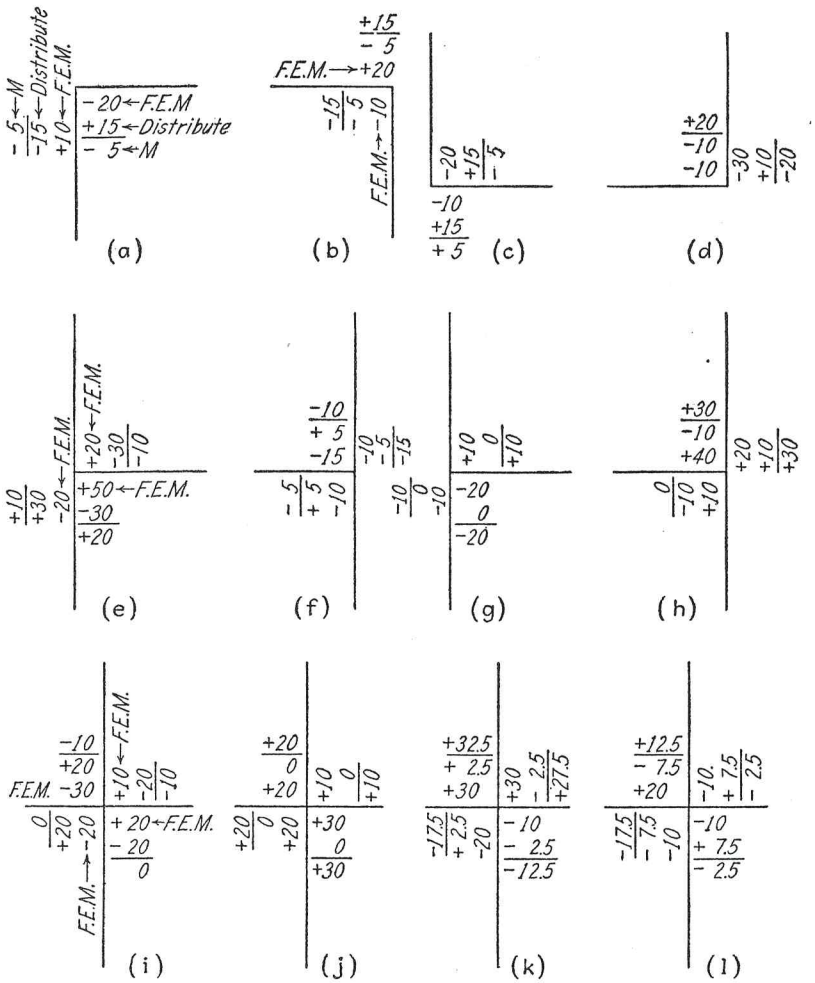

FIG. 16. Moment Distribution — Designer's Convention for Signs of Bending Moments.

the moments at the right ends of the girders above them to get them out of the way of the column moments, as illustrated in Fig. 16 and elsewhere.

Summary of Principles. It is well at this point to summarize all principles essential to the method of moment distribution.

(1) Write all computations on a diagram of the structure.

(2) Use the convention of signs recommended.

(*a*) Use the usual convention of signs for bending moments (positive moment sags the beam, negative moment humps the beam) in both girders and columns, the girders being looked at from the bottom of the sheet, the columns from the right-hand side, as a drawing is usually read.

(*b*) Write column moments parallel to the column and on the left of the joint at the top of the column, on the right of the joint at the bottom of the column.

(3) Find fixed-end moments, in all loaded members, by the column analogy unless formulas or tabulated values are available. Similarly find the stiffness and carry-over factor at each end of each beam; if the beams are symmetrical these will be alike at the two ends.

(4) At each joint distribute the unbalanced moment to all connecting beams in proportion to their stiffness. Carry over in each beam this distributed moment, times the carry-over factor, to the other end with proper sign. (This means with reversed sign in the case of straight members; for curved members the carry-over may be positive.)

(5) Repeat the procedure until the desired precision is attained, stopping after a distribution. Add all values — original fixed-end moments, distributed moments, moments carried over — at each end of each member for totals.

(6) Complete the solution, if further data such as shears or reaction are needed, by statics.

(7) The analysis assumes no relative movement of the joints of the structure.

(8) The solution may be checked. See pages 91 and 119.

Thus stated, the method has no limitations except that the joints do not move. It is always possible and usually easy to correct for such movement, where it occurs, by the indirect method of moment distribution to be explained later.

With this single limitation the method as stated above is applicable to any combination of beams, either straight or curved, and to any combination of loads. By modifying the method slightly, as explained in the next chapter, some time can be saved. But no modification is necessary. There are no exceptions and no special cases. The column analogy is an auxiliary tool for finding the fixed-end moments, the stiffnesses and the carry-over factors.

Although no modification is necessary, one simple modification — that of treating a member free at its ends as such, rather than as a member fixed at its ends — is so obvious and convenient that it is given here

Treating Free-end Members as Such. It is inconvenient to continue to carry over moments to the free end of a member and then release them and carry them back again. It is better to treat the member as free-ended in the first place. If we do so, we must change its fixed-end moments and its stiffness (it will have no carry-over factor) from those which it would have if fixed-ended. This is readily done by moment distribution.

Modifying the Fixed-end Moment for Members Free at One End. Suppose, in a prismatic beam, the fixed-end moments are as shown in Fig. 17 and it is desired to modify them by freeing one end. We simply release the free end and carry over half the distributed moment.

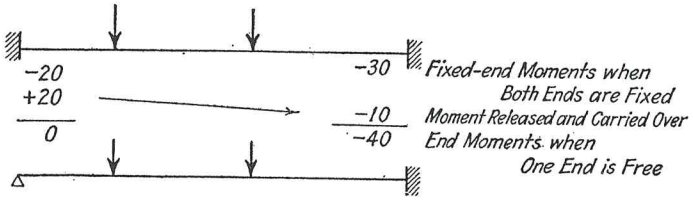

FIG. 17. Modified Fixed-end Moment — One End Hinged.

If the beam is not prismatic, we can do the same thing after we have found the fixed-end moments and the carry-over factor at the end to be freed. Suppose these values are for fixed-end moments: -60.3 and -100.2, and for carry-over factor: 0.524. The final moment at the fixed end is -131.8 as shown in Fig. 18.

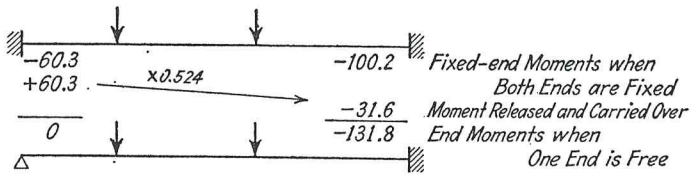

FIG. 18. Modified Fixed-end Moment — One End Hinged.

Modifying the Stiffness for Members Free at One End. Suppose that the moment at A, Fig. 19, produced by unit rotation at A, or the stiffness at A, is found to be S_a when both ends are fixed, and that the carry-over factors are found to be r_a at A and r_b at B. Then we have M_a at A and $-r_aM_a$ at B (where r_a is the ratio of the moment at B to the moment at A when B is fixed). Releasing this and carrying it over gives at A a moment $M_a(1 - r_ar_b)$, which is the stiffness at A when B is free to rotate.

If the beam is prismatic, $r_a = r_b = \frac{1}{2}$, and the stiffness for free-end condition is $(1 - \frac{1}{2}\,\frac{1}{2}) = \frac{3}{4}$ that for fixed-end condition. The stiffness, then, is measured by $\frac{3}{4}\,I/L$.

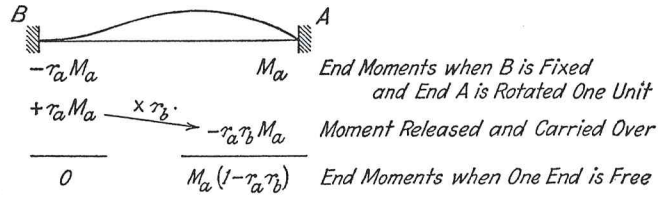

FIG. 19. Modified Stiffness — One End Hinged.

As an illustration of the convenience of using this modified stiffness value, the example of Fig. 8 is reworked in Fig. 20 and the check indicated at the end of the solution.

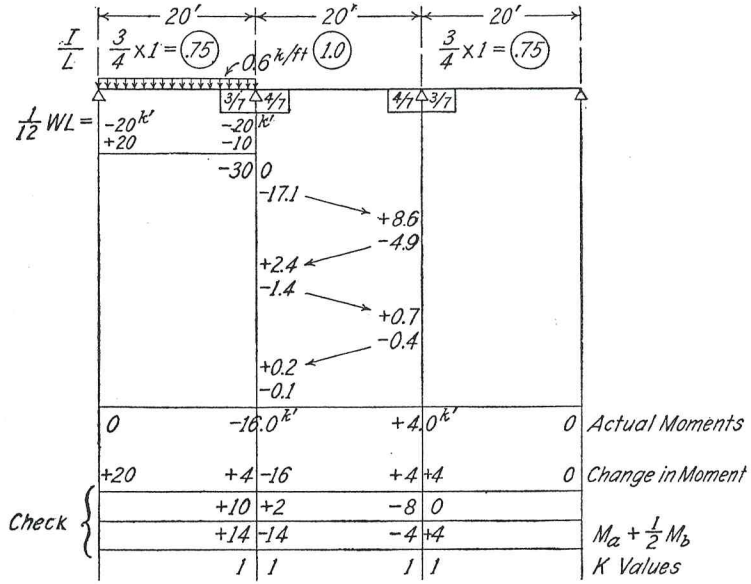

FIG. 20. Moment Distribution — End Supports Treated as Free. (Same Problem as Fig. 8.)

Illustrative Problem — Fig. 21. A more general problem is shown in Fig. 21. The left end A is fixed. One-half of the moment due to the rotation of joint B, of opposite sign, is carried to it each time the adjacent joint is allowed to rotate. This total increment of moment may be conveniently computed at the end of the solution in one operation. The difference between the final moment at B, -6.7, and the original

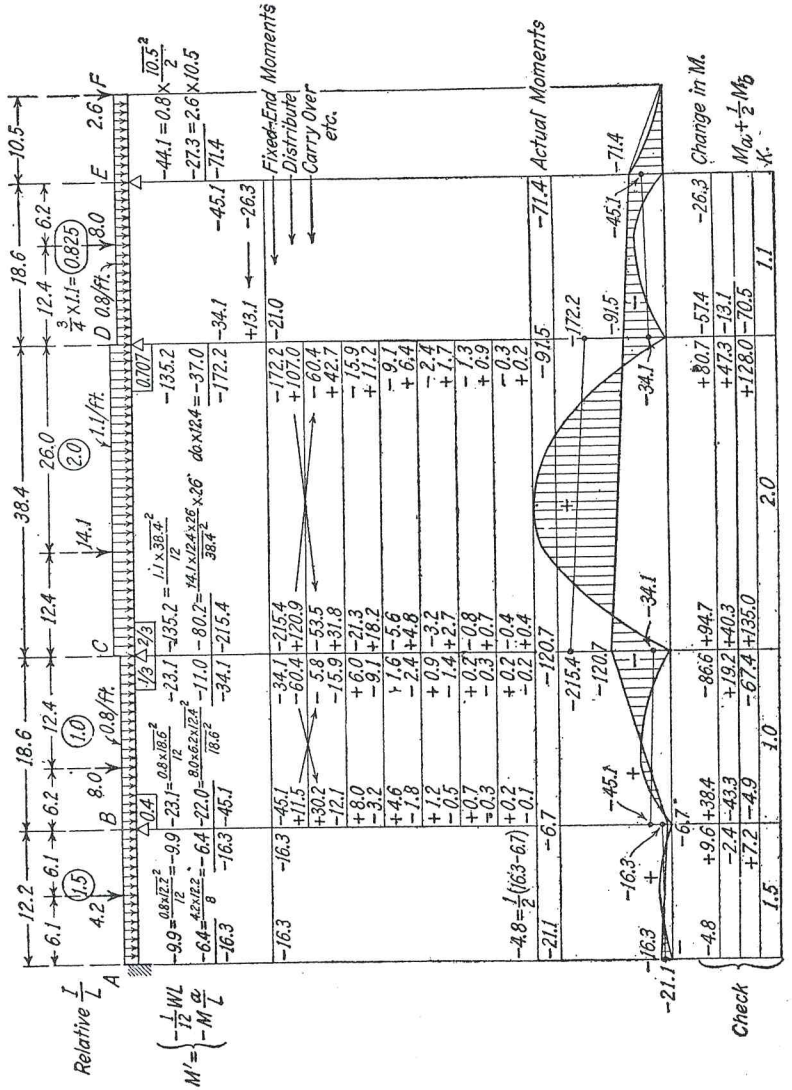

FIG. 21. Moment Distribution.

fixed-end moment -16.3 is $+9.6$. One-half of this value of opposite sign or -4.8 is then added to the moment at end A.

The right end is an overhanging beam. The moment at E is that computed for the cantilever. Since the stiffness of a cantilever is zero,

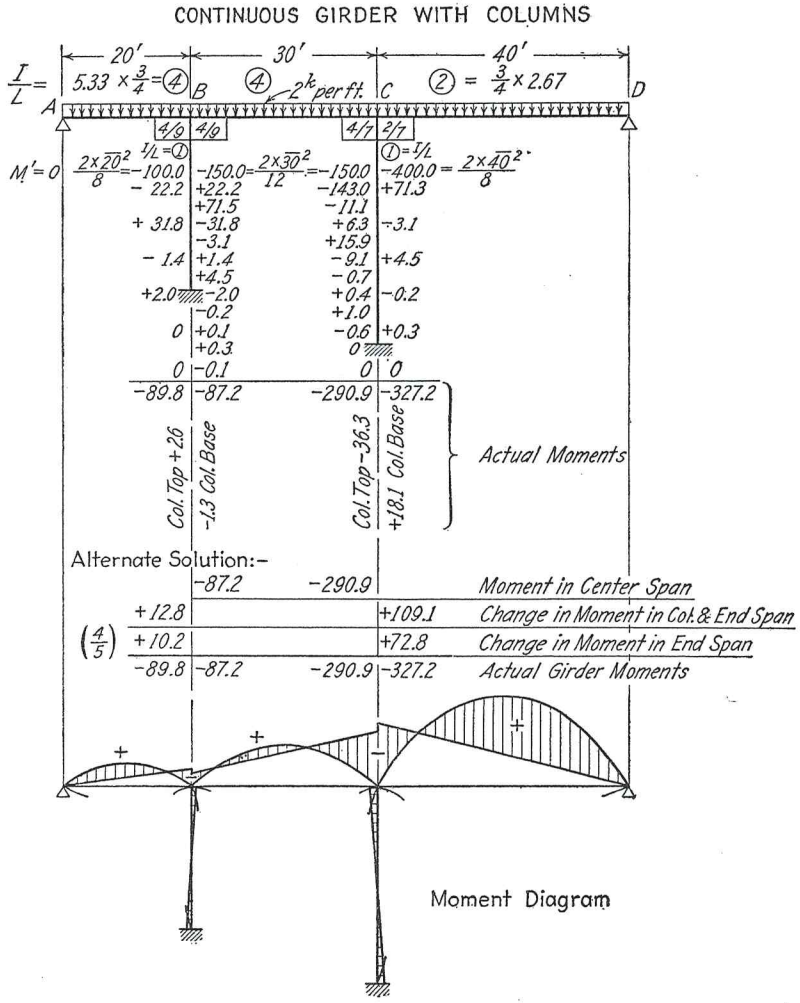

FIG. 22. Moment Distribution.

the unbalanced moment at E, -26.3, all goes to span ED, and $+13.1$ is carried over to joint D. Joint E is balanced and acts as a free hinge, the I/L value in span DE being reduced accordingly. The distribution is then carried out as before, balancing in turn each of the three inter-

mediate supports. It is evidently unnecessary to carry down the figures on the outside of joints B and D.

The moment diagram is easily constructed, as shown in the figure, by combining the simple-beam moment curve with that due to continuity. The check is shown at the end of the solution.

Illustrative Problem — Fig. 22. In Fig. 22 a simple girder frame is analyzed. The girder moments have been carried down on each side of the column and the moments at the tops of the columns obtained by subtraction. The moments at the bases are one-half the moments at the tops of the columns, and of opposite sign.

It is unnecessary to carry down the moments for the outside girders. With the moments in the center girder known, the others follow di-

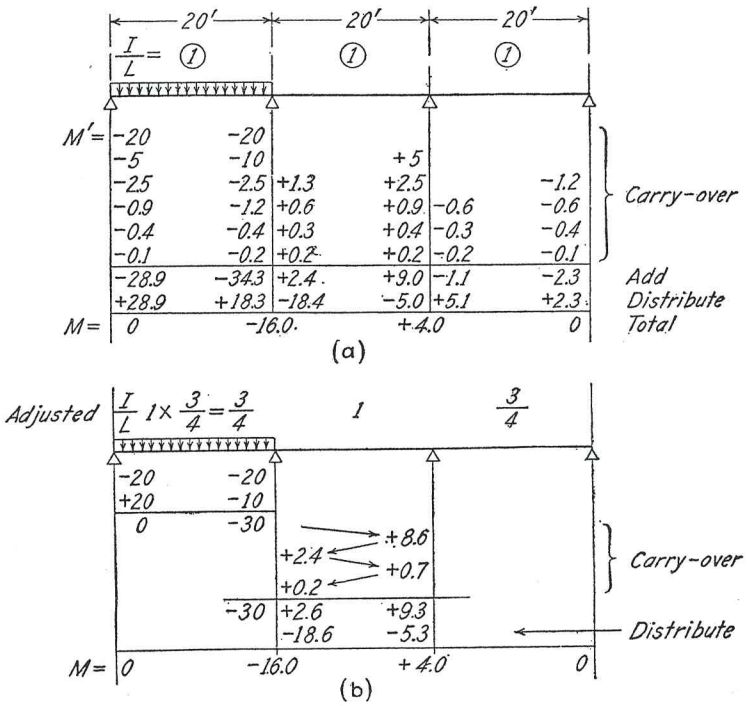

FIG. 23. Abbreviated Moment Distribution. (Same Problem as Fig. 8.) (*a*) End Span not Adjusted. (*b*) End Span Adjusted.

rectly as shown in the alternate solution. Conditions of statics give the change in moment in column and flanking girder together (the sign is automatically determined by the condition that the sum of all moments is the same on both sides of the support and of the same sign).

This total difference is then distributed between column and side span in proportion to their relative stiffness values.

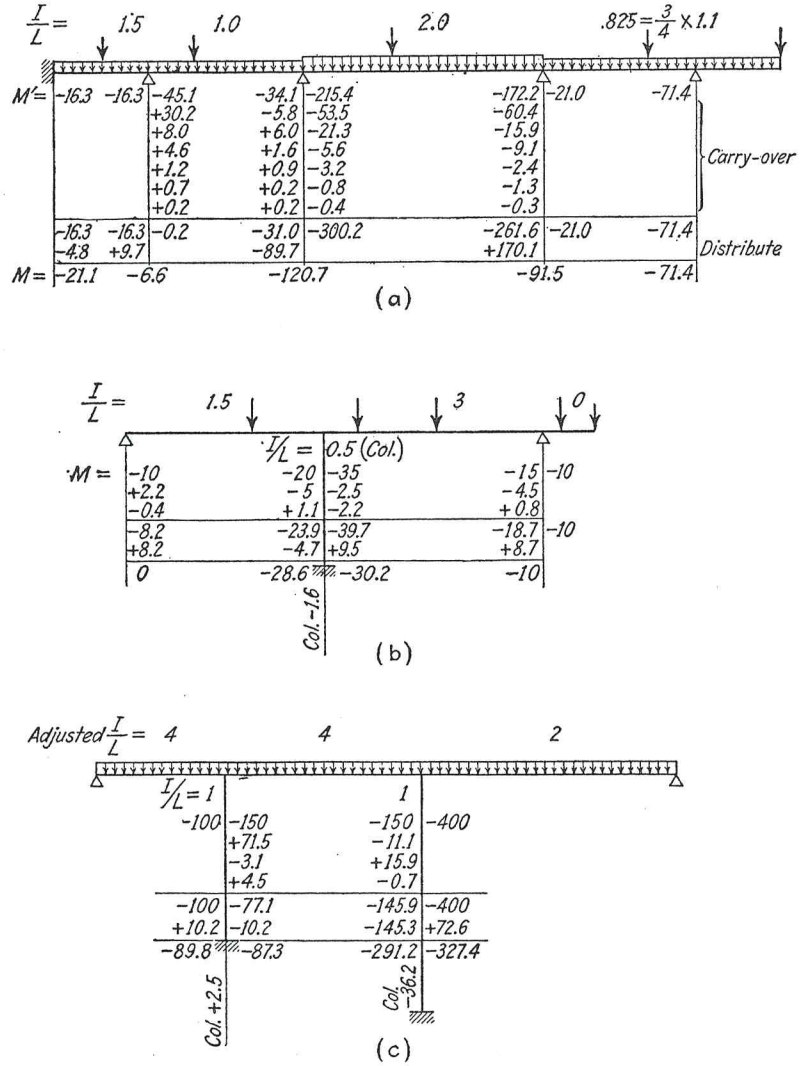

FIG. 24. Abbreviated Moment Distribution.
(*a*) Problem of Fig. 21. (*b*) Problem of Fig. 11. (*c*) Problem of Fig. 22.

Abbreviated Computations in Moment Distribution. To one who is familiar with the process of moment distribution it soon becomes evident that it is not necessary to write the distributed moments each time.

We may write only the moment carried over, and at the end of the procedure we may find the totals of the original fixed-end moments and the moments carried over, and distribute the unbalanced total. The physical significance of the procedure is somewhat obscured, but time is saved in the computation.

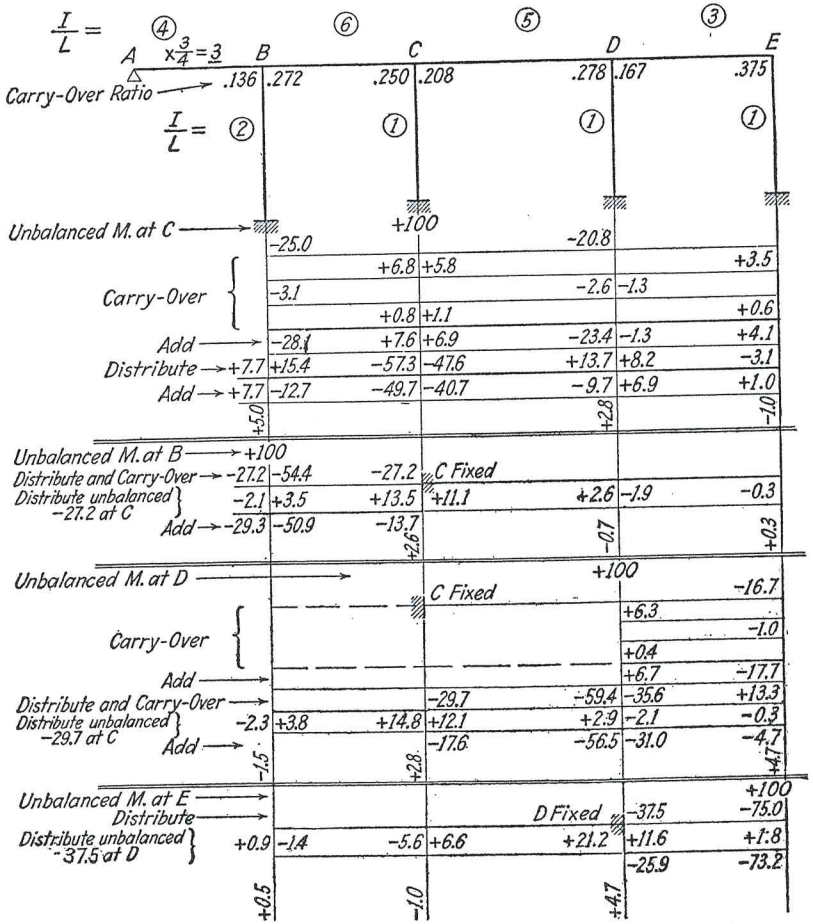

FIG. 25. Moment Distribution at Separate Joints.

Figs. 23 and 24 show problems explained in the text above, reworked by this abbreviated method. Note the saving of work by adjusting the end spans in Fig. 23. Note also that Fig. 24 (*b*) can be solved directly after balancing the end supports.

Distribution of Unbalanced Moment at Separate Joints. Where a structure is to be studied for several conditions of loading, it may be

convenient first to distribute single unbalanced moments at the joints of the structure and then find, for the different conditions of loading, the fixed-end moments and combine their effects.

This procedure is further shortened if the distribution is first made for a joint near the center of the structure. Unbalanced moments at other joints may then be distributed on the assumption that this joint is locked, and the fixed-end moment finally found at this joint may be distributed from the values already computed. Thus we may successively lock the joints already analyzed as joints further from the center are studied; the computations are much shortened thereby.

Fig. 25 shows the application of this method to a rigid frame restrained against sidesway. To illustrate possible variations in technique explained on previous pages we have used the convention of signs for static moments at the ends of the members (positive moment tends to rotate the joint clockwise) and we have also used the abbreviated method of computation in which the moments are carried over and the unbalanced moment distributed once for all at the end.

We first distribute an unbalanced moment of +100 at joint C.

Next, hold C rigid and distribute an unbalanced moment of +100 at joint B. This produces an unbalanced moment at C which is then distributed by proportion using the values already found.

Similarly C is held while an unbalanced moment +100 is distributed at D. The resulting unbalanced moment at C is then distributed.

Finally hold D while an unbalanced moment is distributed at E. Then distribute the unbalanced moment at E.

Evidently these values may now be used for various combinations of unbalanced fixed-end moments at the joints due to loads, to settlement of support, to change of temperature or any other influence tending to distort the frame.

B. Indirect Method

In certain cases it is much easier to find a set of moments consistent with statics and with continuity, and from these the forces which produce them, than it is to start with the forces and then find the moments. A common example is that of a rectangular bent loaded at its top, Fig. 26 (*a*).

In this case we cannot start with the load, find fixed-end moments in the columns, distribute them and thus find the moments, because, during the process of distribution, joints A and B would move horizontally. But we can pull A and B over a certain amount and hold them there, find the fixed-end moments in the columns, distribute them and finally

find what force is necessary to hold the bent in this position — that is, to satisfy statics.

Better still, we can assume some consistent set of moments in the columns in the first place, without bothering about how much horizontal deflection they represent, and, after distributing these, find the horizontal force needed to preserve equilibrium. Having now a set of moments corresponding to one value of the horizontal force, we can find the moments for any other value by proportion.

The values assumed for the fixed-end moments produced by the horizontal deflection must be consistent. In this case they must be such as give the same deflection at the tops of both columns. The moment

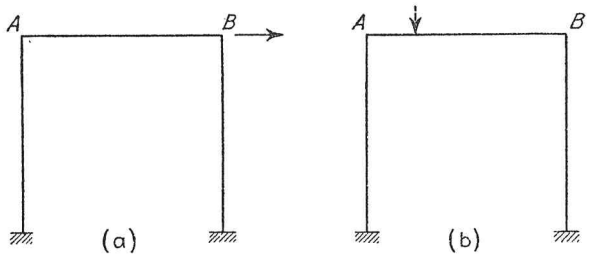

FIG. 26. Bent Subject to Sidesway.

curves for this lateral displacement in the two columns when both ends are fixed are similar in shape. Then,

since $\Delta \propto \dfrac{ML^2}{I}$, we have $M \propto \dfrac{I}{L^2} \propto \dfrac{K}{L}$ for equal deflections

and for the shear, we have $H \propto \dfrac{I}{L^3} \propto \dfrac{K}{L^2}$ for equal deflections.

Fixed-end Moments by Moment Distribution. Assume the beam of Fig. 27 pulled down at A without rotation at A. Assume moments of $\pm 100^{k'}$ in the 20-ft. span. The moments in the 10-ft. span will then be $(20/10)^2\, 100 = \pm 400^{k'}$.

Distribute the moments and compute the reaction. Then find the fixed-end moments for the given load by proportion, as shown. The results, shown in the moment diagram at the bottom of the figure, are more easily computed by the method previously explained (page 61), but are included here for illustration.

The method may be further illustrated by finding the fixed-end moments in a beam made up of two parts having different I values due to a load of 60^k at the junction — a stepped column in a mill building loaded transversely at the step.

Assume that point B, Fig. 28, is pulled down without rotation at B by some force which produces moments of 100 in AB. Then the moments in BC must be to those in AB in the ratio I/L^2.

Distribute the moment and find the shears in the two beams and from these the force which must be acting at B. Then by proportion find the true end moments for 60^k. The computations are shown in the figure.

This is merely an illustration of method. The problem is probably more readily solved by the column analogy.

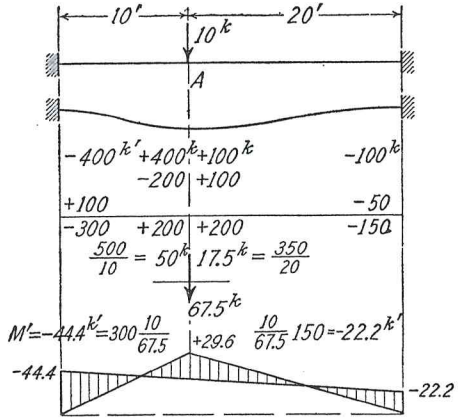

FIG. 27. Moment Distribution — Indirect Method.

Movement of Joints — Sidesway. In many problems in the analysis of rigid frames (girders continuous with each other and with their

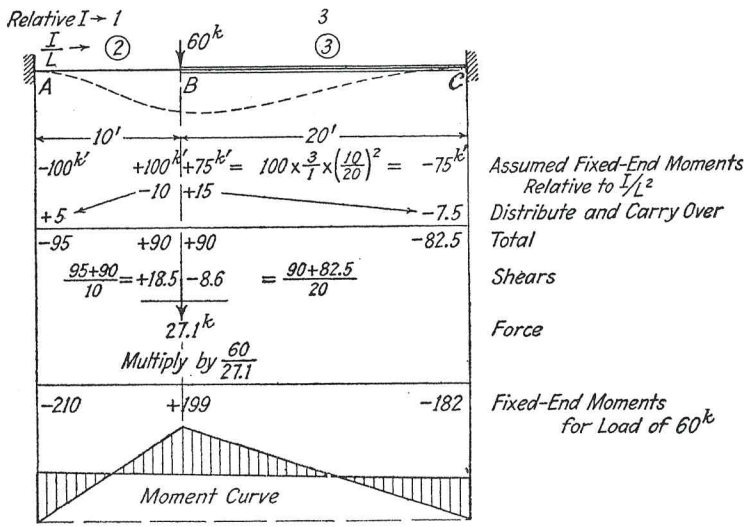

FIG. 28. Moment Distribution — Indirect Method.

supporting columns) a solution assuming no movement of the joints does not satisfy statics because the shear in all columns of any one story

is not equal to the known shear in that story. This indicates sidesway — sometimes referred to in the text as sidelurch — of the frame sufficient to make $\sum H = 0$.

For transverse loads sidesway is usually indicated.

Where sidesway is indicated, the following questions at once arise; and evidently, from the viewpoint of the designer, they are important in the order given:

(*a*) Can sidesway actually occur, or is it resisted by fixed bearings at abutments or by lateral bracing?

(*b*) Will it occur for those conditions of loading which are important in the design of the structure?

(*c*) How important is it in design as indicated by approximate analysis? Does it justify exact analysis?

(*d*) Exactly what moments does it produce?

If sidesway cannot occur, or if it will not occur for those loadings which are critical in the design, that ends the investigation. If approximate analyses show sidesway to be so unimportant as not to justify exact analysis, we go no further. In some cases exact analysis is justified.

Approximate analyses for sidesway may be made by treating the unbalanced shears as shears due to wind loads are treated. (See Chapter VII.) It is not intended to discuss fully these methods here, but the following facts may be noted:

(1) The total shear in any story is distributed in some way among the columns of that story.

(2) If there is no rotation at either end of any column, the shear is distributed to the columns in proportion to the values I/L^3.

(3) A rough approximation to the moments may be had by assuming that the shear is distributed as just indicated and that the points of inflection in both girders and columns are at the midpoint.

In general the effect of sidesway produced by vertical loads is to reduce in the columns the larger moments indicated; the moments in the girders are usually little affected by sidesway. Usually, in addition to the moments produced in the columns by vertical loads, there are also moments due to wind, traction or other transverse forces, and sometimes to changes of temperature. All these are subject to considerable uncertainty; it is not usual at present to attempt an exact analysis for wind stresses, though such analyses are likely to become more common.

These considerations indicate that analysis for sidesway due to gravity loads should come at the end of the design. Effects produced by it are, then, to be thought of as corrections in the final design. It will usually be found that exact analyses are not justified.

The elementary procedure is given below. Analyses for wind stresses are discussed at some length in Chapter VII, Rigid Frames.

Problems Involving Sidesway. In Fig. 29 the column moments are first found assuming the girder rigid, equal shears in the two columns, and points of contraflexure at mid height. For convenience the frame has been unfolded into a continuous beam.

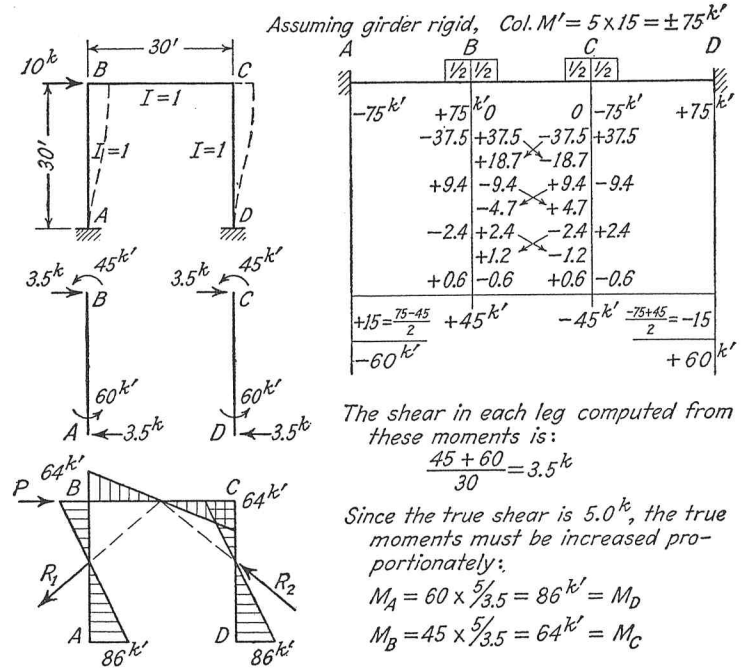

FIG. 29. Moment Distribution — Sidesway.

The column moments resulting from moment distribution are found to be consistent with a total horizontal force of $2 \times 3.5 = 7.0^k$. The true moments follow by proportion, as shown.

A similar problem with load midway up the side of the bent is solved in Fig. 30. The fixed-end moments are designated F.E.M. The details of moment distribution are not shown. The results of moment distribution are marked M.D. in the figure.

We first find the fixed-end moments on the loaded column and distribute these assuming no sidesway. The resulting moments are found to be consistent with a shear at the top of the bent of 2.42^k. Then assume the girder rigid and fixed-end moments in the columns of 100 kip-ft. From the moments resulting from distributing these fixed-end

moments we find a total shear of 12.53^k. The true moments due to sway follow by proportion and are added to the original set of moments as shown.

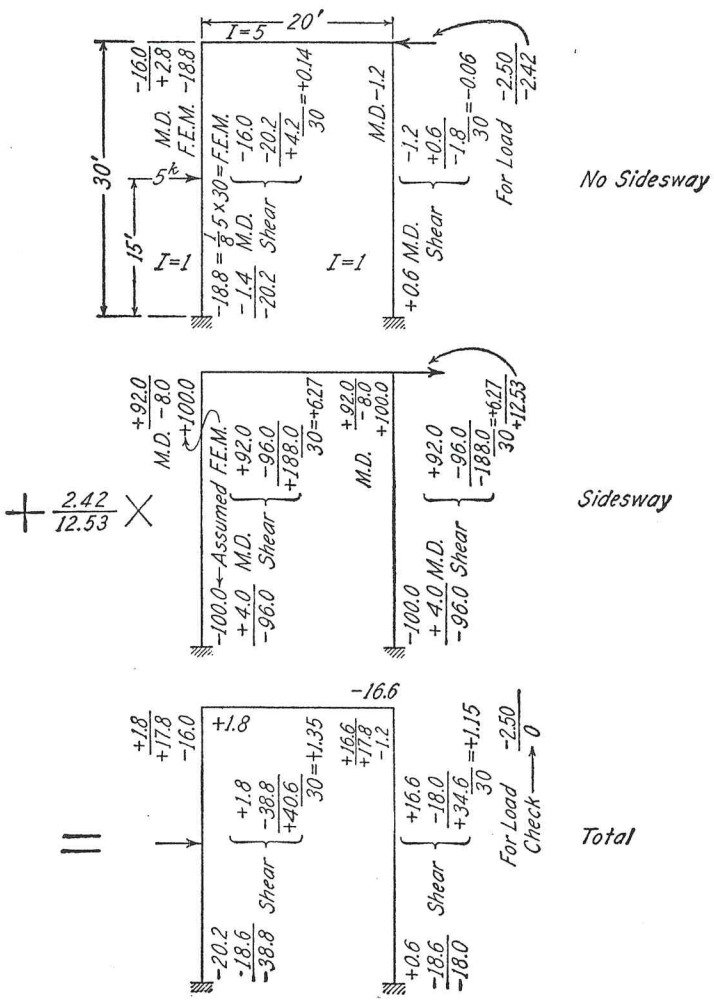

FIG. 30. Moment Distribution — Sidesway.

Note that the procedure of computing shears is the same as in a beam. The arrangement of computations shown, though needlessly formal in this case, is recommended for clearness, though it has not been used in the other problems here.

An unsymmetrical bent is solved in Fig. 31.

The solution of an unsymmetrical three-column frame subject to sidesway is given in Fig. 32. First considering the structure laterally restrained, the moments indicate a total unbalanced shear to the left

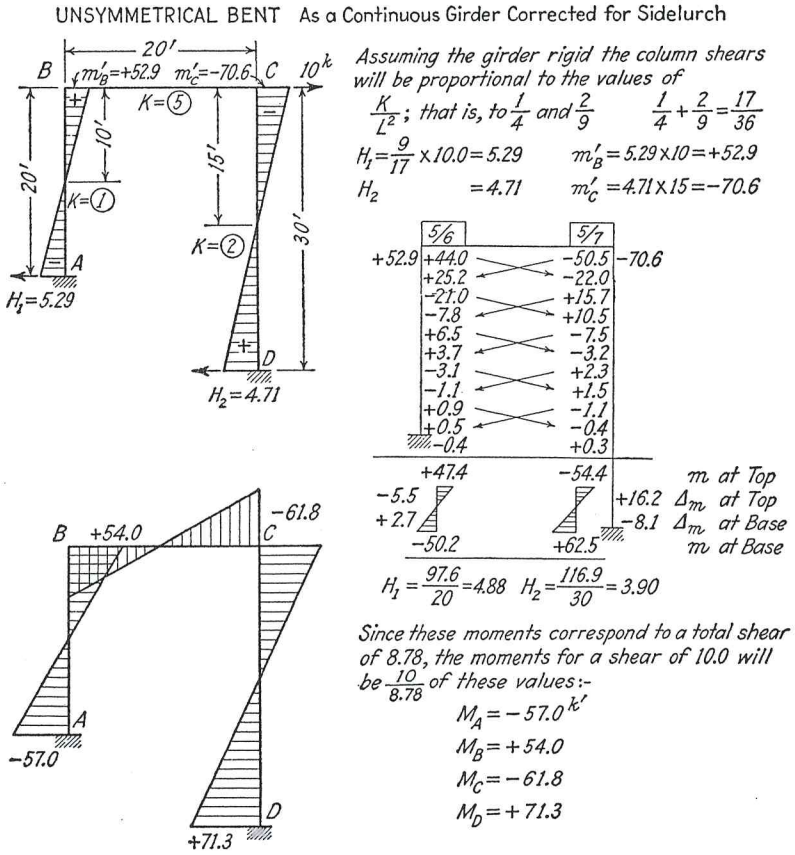

FIG. 31. Moment Distribution — Sidesway.

of 0.7^k. Applying at the top a unit force of 1.0^k to the left a set of moments is produced consistent with a total unbalanced shear of 0.89^k and the true moments due to sway follow by proportion. The final moments are the algebraic sum of the original moments and those due to sway.

Another illustration is shown in Fig. 33. In this case if point B moves a certain distance Δ_1 normal to member AB, then point C moves 0.74 Δ_1 normal to CD, and point C moves relative to point B a distance 0.62 Δ_1 normal to BC. (See pages 45–46, Chapter III.)

We can now write a consistent set of fixed-end moments proportional in each member to the product of the relative displacement of the ends times I/L^2 for the member.

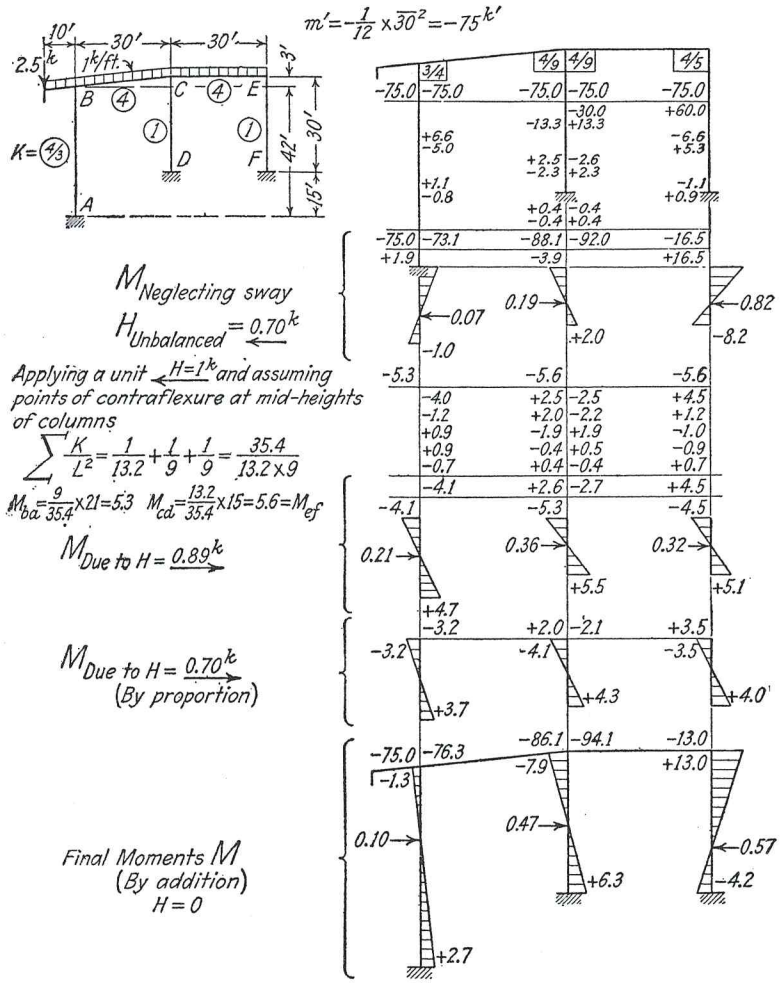

FIG. 32. Moment Distribution — Sidesway.

After these moments are distributed the value of the force at C may be found by statics. The moments for the given force at C may then be found by proportion.

This example is more important as an illustration of method than as a practical problem. It may also be solved by the column analogy. The

method explained here, however, can be extended to the types of structures shown in Fig. 34 and will sometimes be found very useful. It

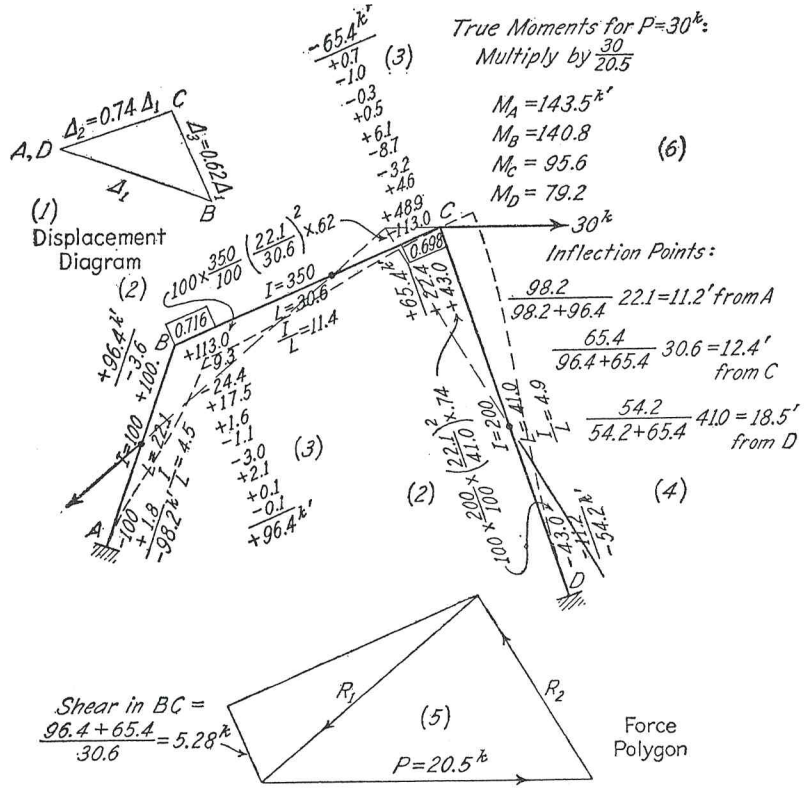

FIG. 33. Moment Distribution — Sidesway.

should be understood that the method of moment distribution gives a picture of the action of the structure under load, which is not true of the column analogy.

Typical Structures. The sketches in Fig. 34 show typical structures which may be analyzed directly by moment distribution where there is no sidesway either because the structure is rigidly fixed at one end or

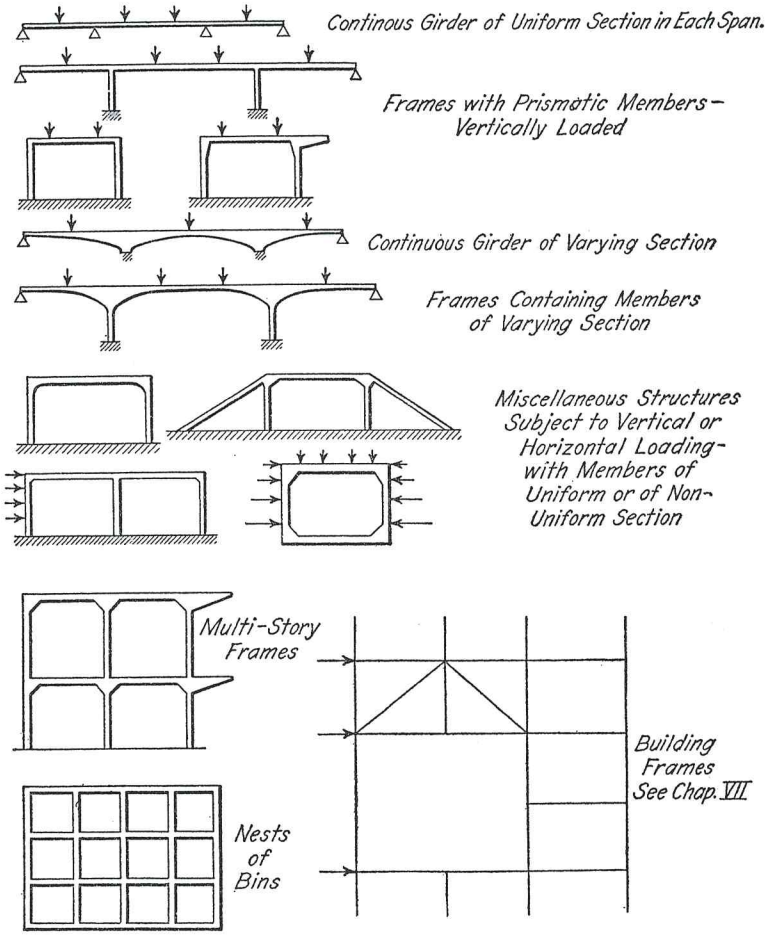

FIG. 34. Types of Problems Solved by Moment Distribution.

because the loading produces no sidesway, or indirectly by correcting for sidesway.

Thus far we have not discussed the determination of fixed-end moments, of stiffness and of carry-over factor in members of varying section or in curved members. These matters are taken up in later chapters. After these are determined, however, the procedure is exactly the same as explained above.

In all these cases there is either no freedom of linear movement of the joints or only one degree of freedom. Where the joints can move linearly in more than one way, the general method is still applicable as explained in Chapter VII.

The case of frames containing curved members is discussed in Chapter IX.

C. Some Applications

Settlement of Supports. The method of moment distribution offers a simple solution of the analytical problem of the forces produced by settlement of supports or other forced displacement of a structure. The difficulty in these cases arises from the physical uncertainties of the problem; usually we can only guess at the amount of settlement unless it has actually occurred, and there are very serious uncertainties as to the factor EI for reinforced concrete.

Suppose that a land slip has produced displacements and rotations of the column footings as shown exaggerated in Fig. 35.

If we imagine the slip to have occurred without rotation of any other joints, and if we know the EI properties of each member, we can com-

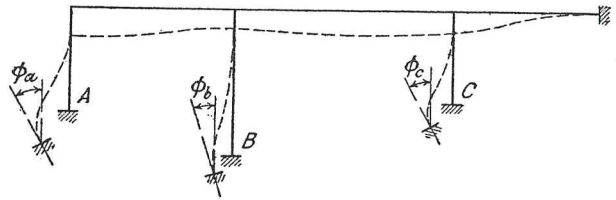

FIG. 35. Settlements and Rotations of Supports.

pute the fixed-end moments in all members by the column analogy. For members of uniform section subjected to transverse displacement only

$$M' = \pm 6EK\frac{\Delta}{L}$$

where

Δ is the relative transverse displacement of the ends of the member.

Distribute these moments and so find the true end moments in the members. Other quantities desired may then be found by statics.

The difficulty of determining stresses produced by settlement of concrete frames does not lie in the analysis for continuity but is inherent in the uncertainty as to the $1/(EI)$ value for concrete beams. (See discussion on pages 43–45, Chapter III.) Perhaps the best method is to estimate the stresses as well as can be done in each beam assuming

no joint rotations. Then assume a consistent set of fixed-end moments for the given, or assumed, settlements, distribute moments and revise the estimated stresses by proportion.

For homogeneous beams of uniform section fixed at ends

$$\Delta = \frac{1}{6}\frac{fL^2}{Ec} \quad \text{and} \quad f = 6E\frac{\Delta}{L}\frac{c}{L}$$

For reinforced concrete these stresses may be high.

Assume

$$E = 3{,}000{,}000 \text{ lb. per sq. in.}$$

Also assume

$$\frac{c}{L} = \frac{1}{2}\frac{d}{L} = \frac{1}{24}$$

which is a normal value. Then for a settlement of 1/4 in. in a 20-ft. span,

$$f = 780 \text{ lb. per sq. in., approx.}$$

If the settlement occurs slowly, E is reduced to perhaps one-third its original value. Moreover f is reduced by rotation of the joints and the

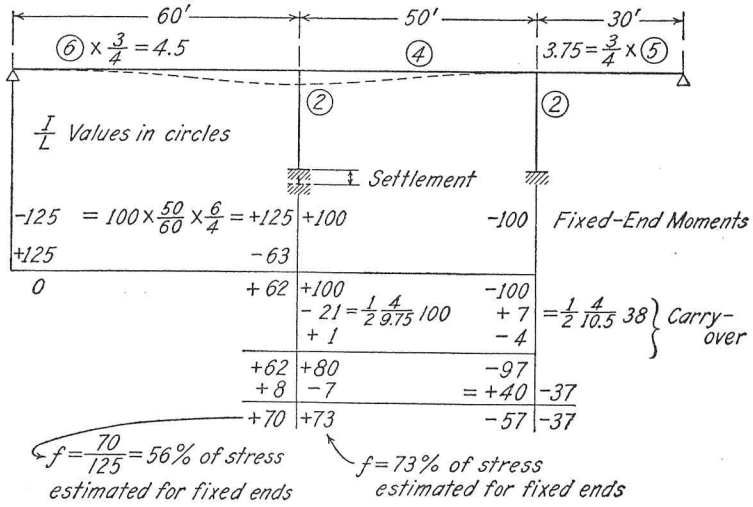

FIG. 36. Settlement of Support.

revised value for f may be 200 lb. per sq. in. to 400 lb. per sq. in. But there is a great deal of uncertainty about all this, which will not be eliminated by fussy computation.

The procedure to allow for continuity is indicated in Fig. 36. A

fixed-end moment of 100 has been assumed in the middle girder and the corresponding moment computed in the end girder from

$$M \propto \frac{\Delta K}{L}$$

These moments are then distributed to give percentage values.

Including Torsional Resistance in Frame Analyses. It is a simple matter to include the effect of torsion of connecting members in frame analyses provided we know the torsional properties of the members.

Evidently the carry-over factor for torsion is unity, by statics.

It is well to understand that a panel of slab and beam construction is quite as complicated a structure as is a flat slab, if, indeed, it is not more complicated. The convention of dividing it into slabs, beams and girders is necessary for convenience, but it is rather naïve.

D. End-rotation Constant

Where, by inspection or in some other way, we know the ratio of the changes in moment at the ends of the beams from those existing when these ends are fixed, unbalanced moments may be distributed directly to the connecting beams. These unbalanced moments are then distributed, not in proportion to the stiffness, but in proportion to the product of stiffness and a factor, which we have written as $1/C$, varying with the ratio of changes in end moment.

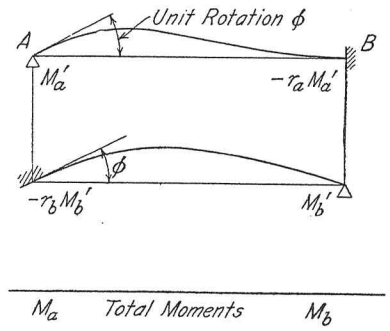

FIG. 37. End Moments Due to Rotation.

A general expression for $1/C$ may be derived as follows:

Suppose that a unit rotation is produced at end A, Fig. 37, of a beam, while end B is held fixed. The moment at A, then, has some value M_a' and that at B equals M_a' times the carry-over factor at A, or $r_a M_a'$.*

Now hold A against further rotation and apply at B a moment M_b' producing rotation at B and also inducing a moment $r_b M_b'$ at A.

Call the total moments due to these rotations M_a and M_b.

* Note that the quantities r_a and r_b are used as algebraic quantities. They are positive if we use the convention of signs for statical moments and negative if we use the convention for bending moments.

Then

$$M_b' = M_b - r_a M_a'$$

$$M_a = M_a' + r_b M_b' = M_a' + r_b M_b - r_a r_b M_a'$$

$$= M_a' + r_b \frac{M_b}{M_a} M_a - r_a r_b M_a'$$

$$M_a\left(1 - r_b \frac{M_b}{M_a}\right) = M_a'(1 - r_a r_b)$$

$$\frac{M_a}{M_a'} = \frac{1 - r_a r_b}{1 - r_b \dfrac{M_b}{M_a}}$$

But M_a is the moment at A corresponding to unit rotation at A for this case, and M_a' is the moment at A corresponding to unit rotation at A when B is fixed, which is the value defined as stiffness at A.

Hence the stiffness, $S_a = M_a'$, is to be multiplied by

$$\frac{1}{C} = \frac{1 - r_a r_b}{1 - r_b \dfrac{M_b}{M_a}}$$

From this general expression, which itself seems somewhat awkward, very simple and convenient expressions follow in special cases as shown in Fig. 38.

Moment Distribution Using Constant for End Rotation. Where an investigator is analyzing continuous frames frequently, this device is extremely useful. For the ordinary man in practice, it probably involves more trouble than does the elementary procedure. Everyone must decide this for himself, but it is important to recognize that it is not necessary to burden your memory with all the short cuts in analysis, and that there are many devices convenient for special computers which become excess baggage for the designer.

We have already used this method in dealing with beams of constant section simply supported. In this case the stiffness of the beam was multiplied by 3/4 before distributing moments, and no moments were carried over in that beam. In the general case, the stiffness would be multiplied by $1 - r_a r_b$. Attention is called in the figure to the fact that in this case it is assumed that the fixed-end moment in the beam is determined on the assumption that the far end is simply supported.

If the structure is symmetrical both as to dimensions and loading with respect to any beam, we know that the moments at the ends due to rotation are the same. Hence $M_b = M_a$ and $1/C$ is determined.

If it is known by inspection that the two ends of the beam turn the same amount but in opposite directions — that the rotation is anti-

symmetrical with respect to the beam — then $M_b = -M_a$, and this determines $1/C$.

Check on Moment Distribution. The expression given above for the value of $1/C$ leads to an important check on results secured by moment distribution. It is easy to see, for a solution of any problem,

VALUES OF END-ROTATION CONSTANT $\frac{1}{C}$

General Expression $\frac{1}{C} = \dfrac{1 - r_a r_b}{1 - r_b \dfrac{M_b}{M_a}}$ — *A is the end of the beam under consideration and B is the other end.*

Description of Beam	*Unsymmetrically Haunched* $r_a \neq r_b$	*Symmetrically Haunched* $r_a = r_b = r$	*Uniform Section* $r_a = r_b = -1/2$
Beam Fixed at Far End $M_b = r_a M_a$	$\frac{1}{C} = 1$	$\frac{1}{C} = 1$	$\frac{1}{C} = 1$
Beam Simply Supported at Far End * $M_b = 0$	$\frac{1}{C} = 1 - r_a r_b$	$\frac{1}{C} = 1 - r^2$	$\frac{1}{C} = \frac{3}{4}$
Equal Moments Due to Rotation $M_b = M_a$ (*Symmetrical Case*) 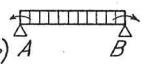	$\frac{1}{C} = \frac{1 - r_a r_b}{1 - r_b}$	$\frac{1}{C} = 1 + r$	$\frac{1}{C} = \frac{1}{2}$
Equal and Opposite Moments at Two Ends Due to Rotation $M_b = -M_a$ (*Anti-symmetrical Case*) 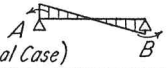	$\frac{1}{C} = \frac{1 - r_a r_b}{1 + r_b}$	$\frac{1}{C} = 1 - r$	$\frac{1}{C} = \frac{3}{2}$
Beam Continuous with Other Beams at B. Rotation at B Due Entirely to Rotation at A 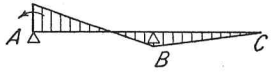	$\frac{1}{C}$ *varies from* $1 - r_a r_b$ *to 1*	$\frac{1}{C}$ *varies from* $1 - r^2$ *to 1*	$\frac{1}{C}$ *varies from* $\frac{3}{4}$ *to 1*

* *It is assumed here that the fixed-end moment at A for this beam is determined for a simple support at the far end.*

FIG. 38. End-Rotation Constant $1/C$.

whether or not the total moment at any joint is zero so that the condition of statics is satisfied. It is not obvious, however, whether the solution satisfies the conditions of continuity.

According to the theory presented above, the unbalanced fixed-end moment should be distributed in proportion to

$$\frac{S}{C} = S\,\frac{1 - r_a r_b}{1 - r_b \dfrac{M_b}{M_a}}$$

where

M_a is the change of moment at the end under consideration.
M_b is the change of moment at the other end.

Hence at any joint

$$M_a \text{ is proportional to } S\,\frac{1 - r_a r_b}{1 - r_b \dfrac{M_b}{M_a}}.$$

$$M_a\left(1 - r_b\,\frac{M_b}{M_a}\right) = (M_a - r_b M_b) \text{ is proportional to } S(1 - r_a r_b).$$

This gives a convenient direct check on the results. Note carefully, however, that M_a and M_b here are changes from the fixed-end moment, not total moments. In Fig. 39, a simple numerical example is solved using the assumed stiffness and carry-over values indicated, and the check shown at the end of the solution.

If the beams are prismatic the above leads to the criterion

$(M_a + 1/2\,M_b)$ is proportional to K, as previously explained.

Examples Using the Factor $1/C$. Assume the fixed-end moments in Fig. 40 to be -200 and -300 and the I/L or K values to be 1 and 3 as shown. The value of $1/C$ for BB' is 1/2 by symmetry, and the value of $1/C$ for BA and $B'A'$ is 3/4 by the physical conditions. The unbalanced moment at B will then be distributed between AB and BB' in proportion to their K/C values or as 1 is to 2.

As a second example assume the K values in five symmetrical spans to be as shown in Fig. 41 and the fixed-end moment in the center span to be -300.

Here $1/C$ for BB' $= 1/2$ by symmetry and $K/C = 3$.
$1/C$ for BA $=$ say $7/8$ and $K/C = 1.75$.
Moment at $B = (1.75/4.75)\,(-300) = -110$.

If spans CA and $C'A'$ are loaded to give the same fixed-end moments as BB', then $1/C$ for BA will be very nearly 1/2; and $M_B = 1/4\,(-300) = -75$.

Simple Frames, Symmetrical or Otherwise, Held Against Sway. It is evident that single rectangular or trapezoidal frames, portals, L-frames, box culverts and similar structures act as simple continuous beams if

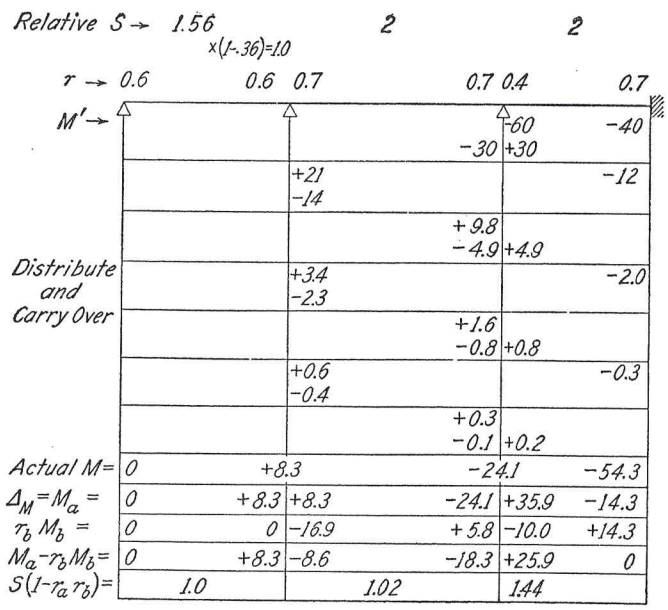

FIG. 39. Check on Moment Distribution.

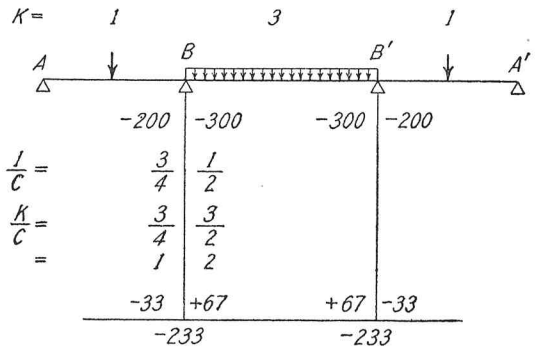

FIG. 40. Moment Distribution — Use of Factor $1/C$.

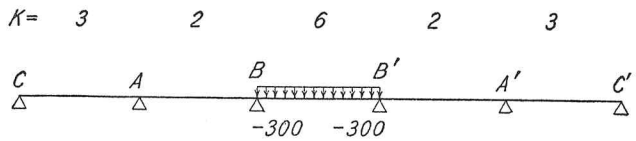

FIG. 41. Moment Distribution — Use of Factor $1/C$.

there is no sidesway. If they are symmetrical as to form and loading, they will not deflect sideways; and if they are restrained against sidewise movement, they cannot so deflect.

In many of these cases, the value of $1/C$ is easily determined by inspection. For the loaded span, $1/C = 1/2$ in symmetrical cases.

For the ordinary bent shown in Fig. 42, symmetrical as to form and

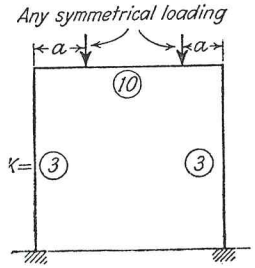

FIG. 42. Moment Distribution — Use of Factor $1/C$.

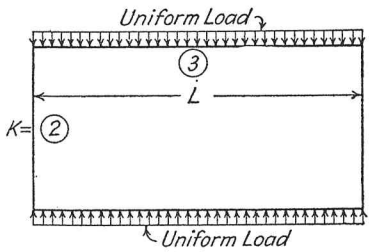

FIG. 43. Moment Distribution — Use of Factor $1/C$.

loading: for the girder $1/C = 1/2$; for the column $1/C = 3/4$ if pinned at the bottom and $1/C = 1$ if fixed at the bottom. Thus if the columns are fixed-ended, the moment in the column at the top

$$= \frac{3}{3 + (10 \times \frac{1}{2})} = \tfrac{3}{8} \text{ or } 37\tfrac{1}{2}\% \text{ of fixed-end moment in girder.}$$

If the columns are pin-ended, the moment at the top of the column is

$$\frac{3 \times \frac{3}{4}}{(3 \times \frac{3}{4}) + (\frac{1}{2} \times 10)} = 31\% \text{ of the fixed-end moment in the girder.}$$

For the culvert shown in Fig. 43 the value $1/C = 1/2$ for all members. The moment in the sides is 40% of the fixed-end moment in top. If

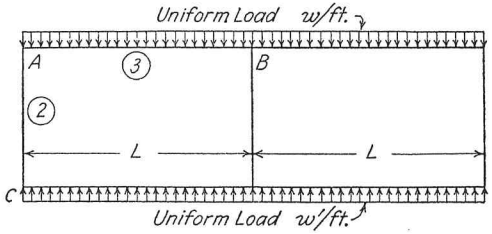

FIG. 44. Moment Distribution — Use of Factor $1/C$.

the load is assumed to be concentrated on the top and uniform over the bottom, the value of C for the sides may be approximated closely.

In the double-box culvert of Fig. 44 at A

$$1/C \text{ for } AB = 1 \quad \text{and for} \quad AC = 1/2$$

$$M_a = \frac{2 \times \frac{1}{2}}{(2 \times \frac{1}{2}) + 3} \cdot \tfrac{1}{12} wL^2 = 25\% \left(\tfrac{1}{12} wL^2\right)$$

$$M_b = \tfrac{1}{12} wL^2 + \left(\tfrac{1}{2} \text{ relieving moment in girder at } A\right)$$
$$= 137\tfrac{1}{2}\% \left(\tfrac{1}{12} wL^2\right)$$

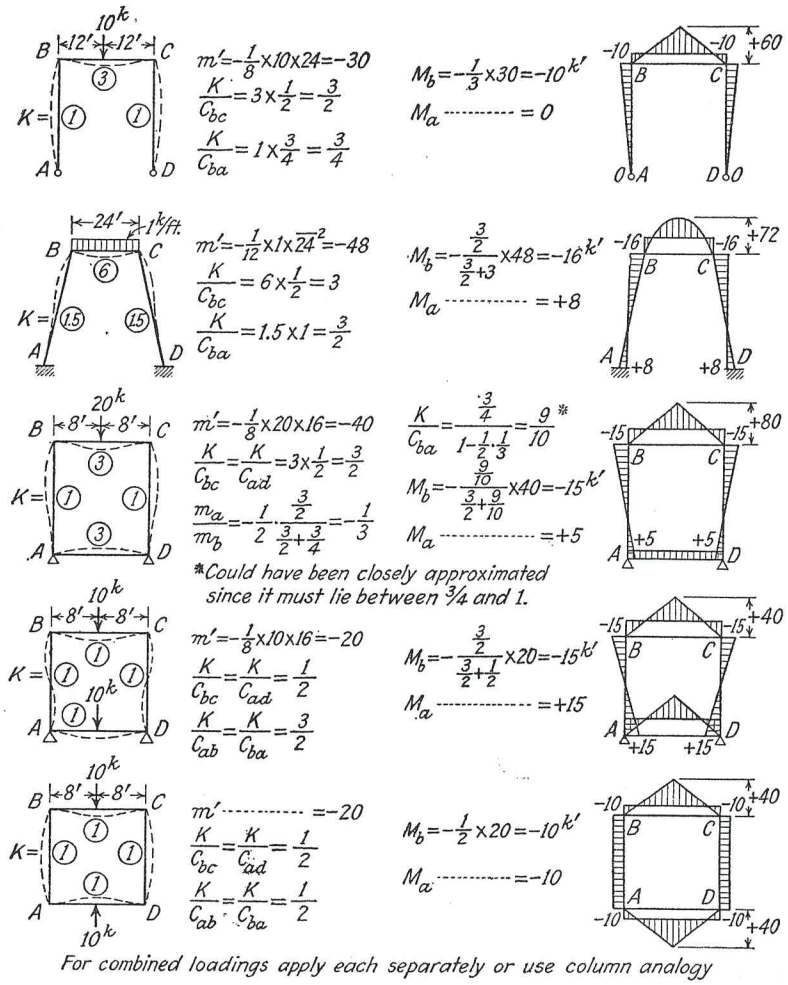

FIG. 45. Moment Distribution — Use of Factor $1/C$.

Figs. 45 and 46 show a number of examples solved by the same method.

Abbreviated Exact Method. In those cases where the K/C values are known for all members except one in a frame, the convergent series represented by moment distribution can be summed very quickly.

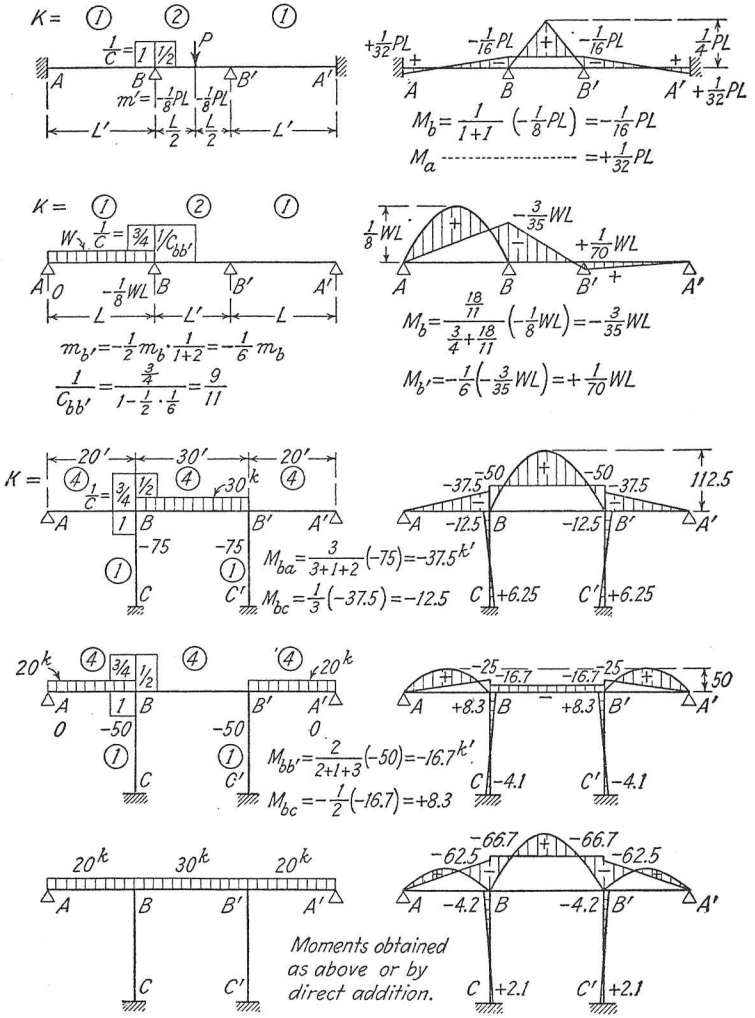

FIG. 46. Moment Distribution — Use of Factor $1/C$.

If we follow through the abbreviated method explained on pages 103–104 it will be seen that in the member in which K/C is unknown — the only member in which any moments are carried over — we are, after the first two distributions, writing a geometrical series. The sum of this

series is $1/(1 - ab)$ times the sum of the first two terms, where a and b are the ratios, at the two ends of the member, of the unbalanced end moments distributed and carried over in the member.

In these cases, then, we may proceed as follows:

(1) Carry over the distributed parts of the unbalanced moment twice.

(2) Multiply the sum of the values carried over by $1/(1 - ab)$ to get the total moments carried over.

(3) Distribute at the joints.

The method is a special device, but it is often very useful in routine computations. Note, however, its restriction to those cases where K/C is known for all members but one in the frame.

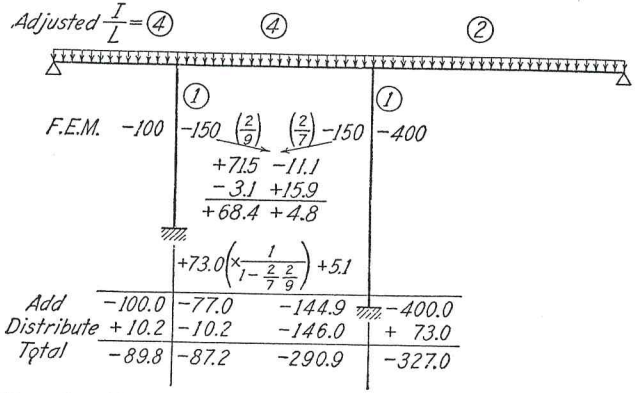

FIG. 47. Moment Distribution — Abbreviated Exact Method. (Same Problem as Figs. 22 and 24c.)

Fig. 47 shows the application of the method to the problem already solved in Figs. 22 and 24. Note that the saving in work here is negligible, but the result is a little more precise.

CHAPTER V

HAUNCHED BEAMS

Object and Effect of Haunching. Frequently beams are deepened near their supports, sometimes with a view to economy, sometimes in order to improve their appearance, often merely to avoid the sharp reentrant angle which occurs at the junction of beam with column. Of course, haunching really occurs in all beams where they join their columns, the portion of the beam between the face of the column and the center line being very much deepened.

The most obvious effect of haunching is to increase the negative moments at supports and to decrease the positive moments at the center of the beam. This reduces the amount of material at the center of the span and thus decreases the moments due to dead load of the girder. Furthermore, the haunch increases the resistance of the beam to the high shears near the supports.

There is, of course, some additional cost of forming the haunches, but, if they are standardized, this should not be serious. In certain types of structures, however, haunches are objectionable; in buildings, for example, they may interfere with partition framing or with pipe runs.

Haunches affect the fixed-end moments, the stiffness and the carry-over factors of the beams. Of these, the change in fixed-end moments is the most important. If all the beams are haunched in the same way, so that their proportions are the same, there will be no change in their relative stiffness; in any case we can show that the relative stiffness and the carry-over factors are less important elements than the fixed-end moments.

Note very carefully that the important thing is the physical constant, rotation per unit moment over unit length (see page 27), commonly taken as $\frac{1}{EI}$. The haunching indicated by the side elevation of a T-beam often has comparatively little effect on the variation of I. In important cases, fixed-end moment, stiffness and carry-over should be determined by the column analogy.

Where members are haunched the procedure of moment distribution follows exactly the procedure explained in Chapter IV. We distribute unbalanced fixed-end moments at each joint in proportion to the stiffness of connecting members, carry over the distributed moments, again

distribute and carry over and repeat to any desired precision. The series will not converge quite so rapidly as if the beams were of uniform section because the carry-over factors will usually be slightly larger.

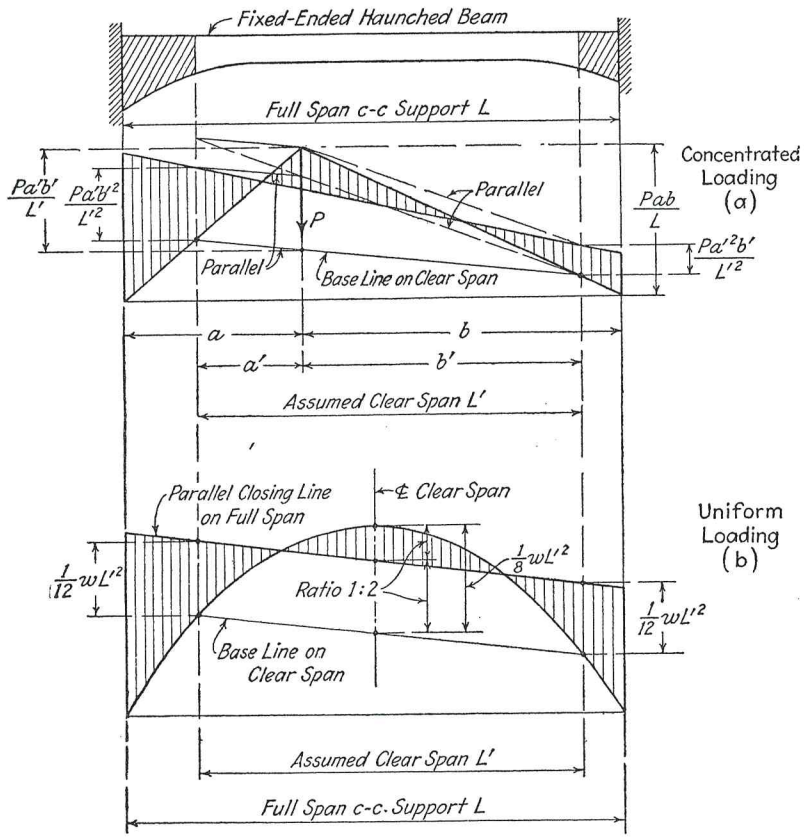

FIG. 1. Haunched Beams — Approximate Analysis for F.E.M.

Approximate Effect of Haunching. *Fixed-end Moments.* We can estimate the effect of haunching on the fixed-end moments pretty well without much computation. By sketching the equivalent column section, we can see the points beyond which the flexure of the beam may be neglected and then, from computed fixed-end moments at these points, find the fixed-end moments at centers of supports. Approximate values for the new stiffness and new carry-over factor may also be found.

Thus, in Fig. 1 (*a*) is shown the moment curve for the fixed-end condi-

tion for a single concentrated load on a beam haunched at the ends. The length to be assumed for "clear span" is first estimated. Our estimate of this is more or less uncertain — in fact, it depends both on the shape of the beam and the position of the load. Probably the familiar rule that the clear span may be taken as the length between the points at which the depth is one-third greater than the depth at the center is as good as any. Sometimes it helps to draw the analogous column section ($1/I$ curve).

We then draw the curve of moments for the beam as if simply supported for its full length, then lay off the fixed-end moments at the ends of the clear span $\left(P\frac{a'b'}{L'}\frac{a'}{L'}\right.$ and $\left.P\frac{a'b'}{L'}\frac{b'}{L'}\right)$ and draw the closing line. A graphical construction for finding fixed-end moments on the clear span is indicated, but is scarcely worth while.

If the load is uniformly distributed, draw the parabola (see page 14) for the beam as simply supported on the full span, as shown in Fig. 1 (*b*). The base line of this parabola on the clear span shows a center ordinate

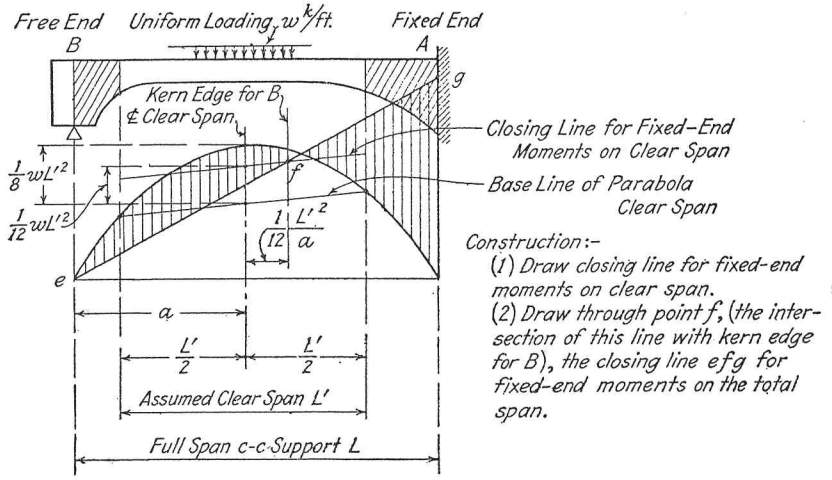

FIG. 2. Haunched Beams — Approximate Analysis — One End Free.

of $\frac{1}{8}wL'^2$, which may now be divided in the ratio 1 : 2 to locate the closing line for the clear span.

Great accuracy is not to be expected from this method, especially in extreme cases of very flat or very long haunches, but its value is so great in indicating the effects of haunching that the authors have felt justified in giving it some prominence. Where the haunch does not extend beyond the quarter point of the span, the error in fixed-end moment will be within 10% and usually much less than this.

If the beam is uniformly loaded and simply supported at one end, both ends being haunched, we follow the same construction, except that we must carry over the fixed-end moment at the free end as shown in Fig. 2. This may be done by drawing through the kern point for the free end,

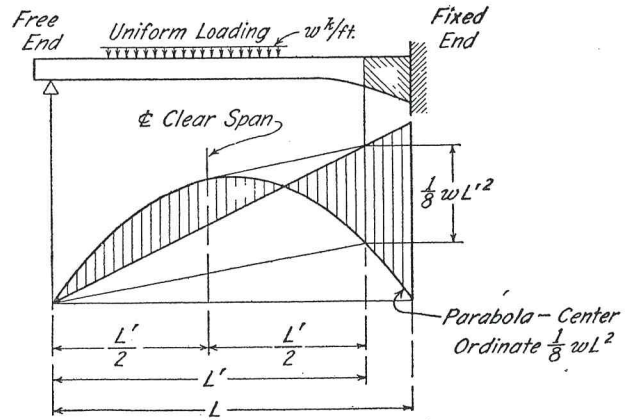

FIG. 3. Haunched Beams — Approximate Analysis — One End Free.

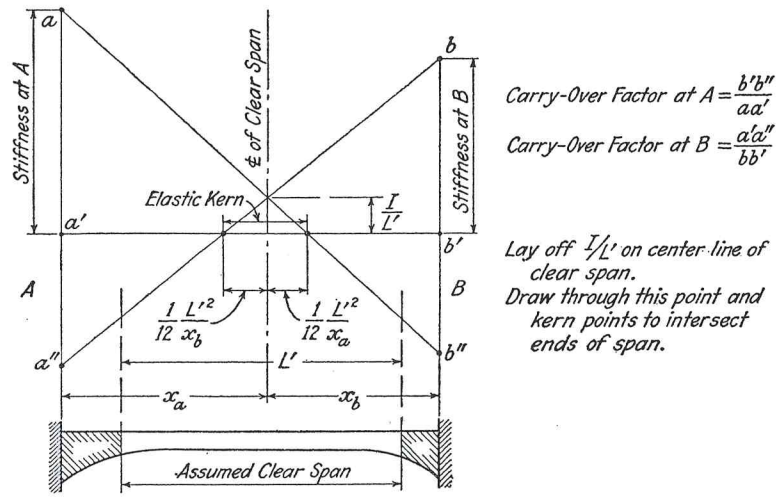

FIG. 4. Haunched Beams — Approximate Analysis for Stiffness and Carry-over.

as shown in the figure. This construction is somewhat simplified if there is no haunching at the free end as shown in Fig. 3.

Stiffness and Carry-over Factor. The stiffness and carry-over factors may be got by the construction shown in Fig. 4. Lay off I/L' on the center line of the clear span. Draw through this point and either kern

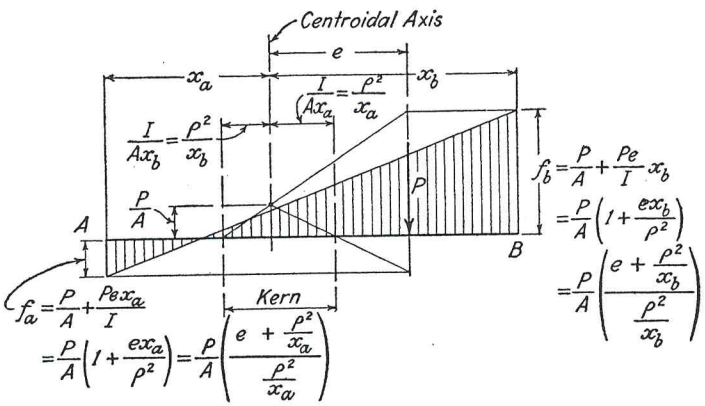

FIG. 5. Flexure and Direct Stress — Graphical Analysis.

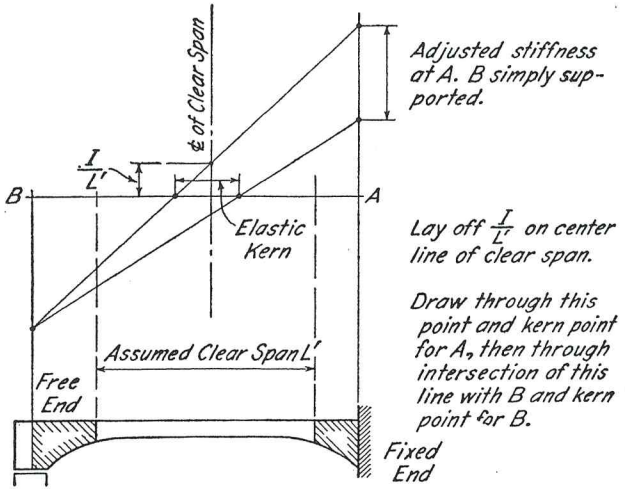

FIG. 6. Haunched Beams — Approximate Analysis — One End Free.

point to intersect the ends of the span. The intercept on the end corresponding to that kern point is the stiffness at that end, and the ratio of the intercepts is the carry-over factor.*

* This simple graphical construction is often used to find the stress distribution on sections eccentrically loaded. Fig. 5 shows the elements of the construction and the algebraic relations involved. In determining the stiffness of a beam (moment at one end corresponding to unit rotation of that end when the other end is fixed) we apply a unit load at one end of the analogous column section. Here

$$A=\frac{L'}{I} \qquad e=x_a \qquad \frac{P}{A}=\frac{1}{\frac{L'}{I}}=\frac{I}{L'}$$

In Fig. 6 is shown a construction for finding the stiffness if one end of the beam is free. Here we have merely found moments at each end for unit rotation at one end, assuming the other end to be fixed and then carried over the moment at the far end. In all these cases it is about as easy to compute the values wanted. See Fig. 7. There is some

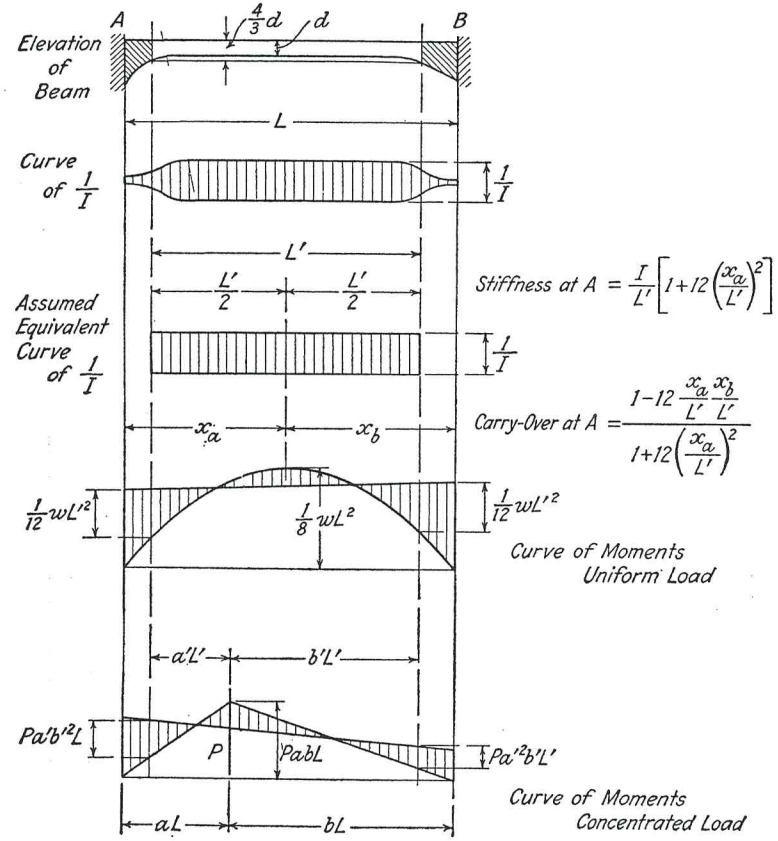

FIG. 7. Haunched Beams — Approximate Analysis.

pictorial value, however, in the graphical construction; it enables us to sketch quickly the relations involved.

Fig. 8 suggests a graphical construction for a viaduct of three spans. By combining this with the semi-graphical construction for symmetrical frames suggested at the end of Chapter VI, it is possible in a short time to run out the curves of maxima in such a case with enough

accuracy to complete the design. Later a more exact analysis should be made.

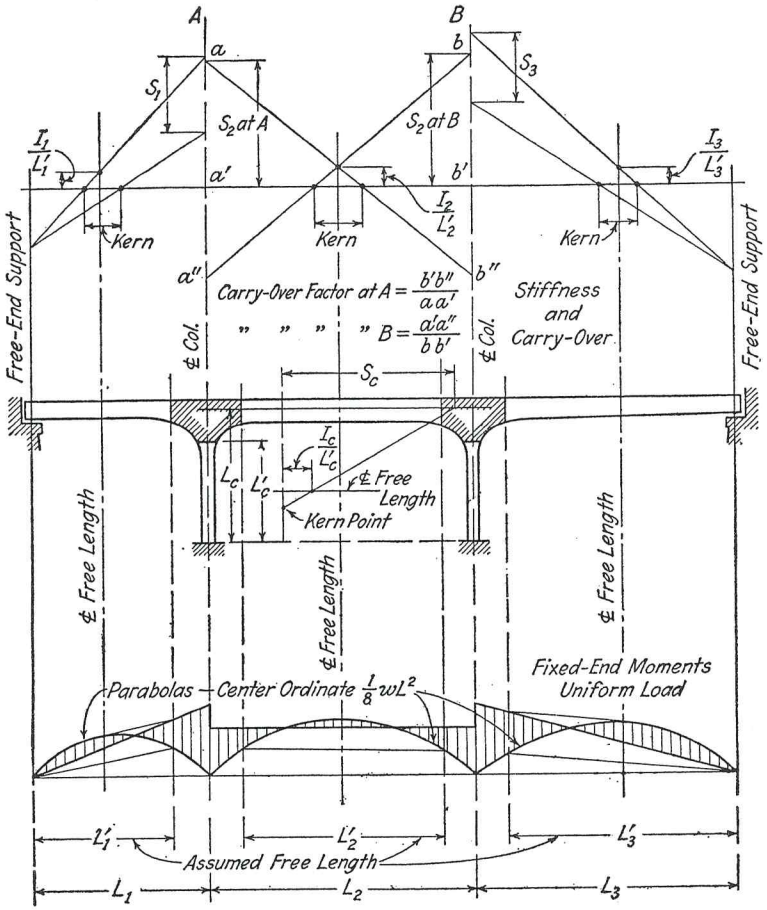

FIG. 8. Continuous Viaduct — Graphical Analysis.

Exact Values by Column Analogy. All properties of beams of irregular section may be found by the column analogy by dividing the column sections into lengths so short that their moments of inertia about their own centroids may be neglected. Since, in most cases, a large part of the beam is of uniform or nearly uniform section, time is saved by treating this part as one section. The curve of moments statically determined should then be so chosen that the resultant moment area on this portion is zero and may be neglected in the column analogy; this is the same as treating this portion as a beam fixed at ends.

Usually exact computations will be made for checking a design that has been made by a preliminary analysis in which an assumed free length of span has been used. It is then convenient to use the same diagram as in the original analysis, adding positive and negative areas at the ends according as the true curve of $1/I$ falls above or below the one assumed in the original analysis.

The required properties of the beam are, of course, fixed-end moments for given loads — sometimes influence lines for fixed-end moments — stiffness and carry-over factors at each end.

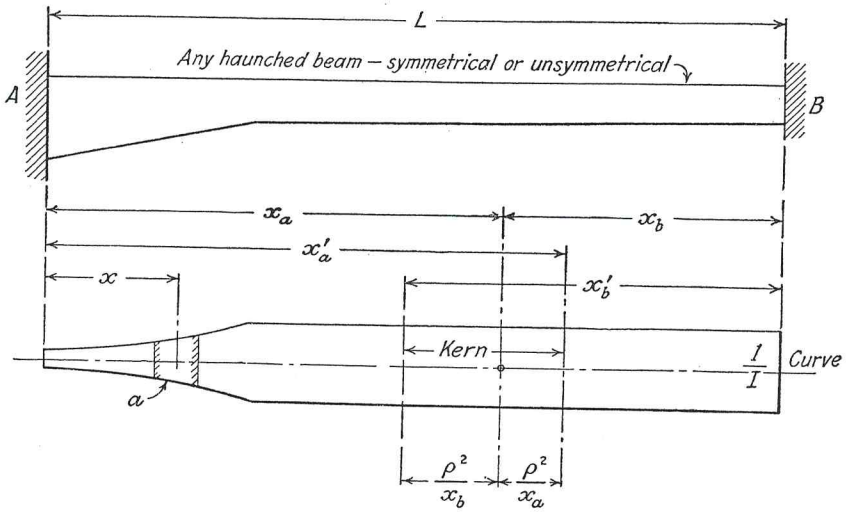

$$A = \Sigma a \qquad \rho^2 = \frac{I_o}{A} \qquad x_a = \frac{\Sigma' a \cdot x}{A}$$

$$S_A = M_{A\phi_a=1} = \frac{1}{A} + \frac{x_a^2}{I_o} \quad \text{or} \quad \frac{x_a' x_a}{I_o}$$

$$r_a = \left[\frac{M_B}{M_A}\right]_{\phi_a=1} = \frac{\frac{1}{A} - \frac{x_a x_b}{I_o}}{\frac{1}{A} + \frac{x_a^2}{I_o}} \quad \text{or} \quad \frac{M_{A\phi_b=1}}{M_{A\phi_a=1}} = \frac{(L-x_a')x_a}{I_o} \cdot \frac{I_o}{x_a' x_a} = \frac{L-x_a'}{x_a'}$$

FIG. 9. Haunched Beams — Properties.

The stiffness and carry-over factor may be computed as shown in Fig. 9.

Fig. 10 shows the solution of a typical problem of this kind, beginning with an assumed trial moment curve as indicated. The problem serves

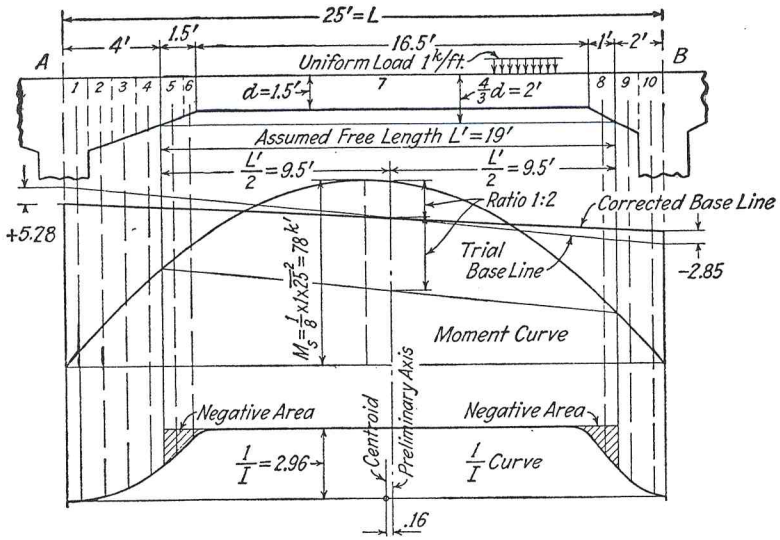

Section	L	d	$\frac{1}{I}=\frac{10}{d^3}$	a	x	ax	ax^2	m_s	$m_s a$	$m_s ax$
1	1	∞	0	0	-13	—	—	—	—	—
2	1	2.8	.45	+0.5	-12	-6.0	+72	-57	-28	+336
3	1	2.5	.64	+0.6	-11	-6.6	+73	-46	-28	+308
4	1	2.2	.94	+0.9	-10	-9.0	+90	-35	-32	+320
5	1	1.8	1.72	-1.2	-9	+10.8	-97	-25	+30	-270
6	0.5	1.6	2.44	-0.3	-8.25	+2.5	-21	-19	+6	-48
7	19.0	1.5	2.96	+56.2	0	—	$\bar{i}_0$= +1690	—	—	—
8	1	1.75	1.86	-1.1	+9	-9.9	-90	-26	+29	+260
9	1	2.25	.88	+0.9	+10	+9.0	+90	-35	-31	-310
10	1	∞	0	0	+11	—	—	—	—	—
				56.5		-9.2	1807		-53	+596
							1			+ 8
					-0.16		1806			+588
				A	$\bar{x}$		I_x		P	M_x

At A, $m_i=$

$$\left[\frac{-53}{56.5}+\frac{588}{1806}(-13.34)\right]$$

$=-.94-4.34=-5.28$

At B, $m_i=$

$$\left[\frac{-53}{56.5}+\frac{588}{1806}(+11.66)\right]$$

$=-.94+3.79=+2.85$

These values apply as corrections to the assumed moment curve, as shown.

FIG. 10. Haunched Beams — Analysis by Column Analogy.

to show that good approximations can be made at the outset, by the methods explained. Following this problem further:

$$\text{Stiffness at } A = \frac{1}{56.5}+\frac{\overline{13.34}^2}{1806} = 0.117$$

$$\left[\text{Assumed } \frac{1}{56.2}+\frac{\overline{13.5}^2}{1690} = 0.126\right]$$

$$\text{Stiffness at } B = \frac{1}{56.5}+\frac{\overline{11.66}^2}{1806} = 0.093$$

$$\left[\text{Assumed } \frac{1}{56.2}+\frac{\overline{11.5}^2}{1690} = 0.096\right]$$

$$\text{Carry-over Factor at } A = \frac{\frac{1}{56.5}-\frac{13.34\times 11.66}{1806}}{0.117} = 0.58$$

$$\left[\text{Assumed } \frac{\frac{1}{56.2}-\frac{13.5\times 11.5}{1690}}{0.126} = 0.59\right]$$

$$\text{Carry-over Factor at } B = \frac{\frac{1}{56.5}-\frac{13.34\times 11.66}{1806}}{0.093} = 0.73$$

$$\left[\text{Assumed } \frac{\frac{1}{56.2}-\frac{13.5\times 11.5}{1690}}{0.096} = 0.77\right]$$

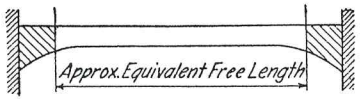

Value of r Equivalent Free Length	Values of 1/C			
	Beam Fixed Far End	Beam Simply Supported Far End	Equal End Rotations	Equal and Opposite End Rotations
r=0.5 Uniform Section	1.0	0.75	0.50	1.50
r=0.6 Equiv. Free Length 85%	1.0	0.64	0.40	1.60
r=0.7 Equiv. Free Length 75%	1.0	0.51	0.30	1.70
r=0.8 Equiv. Free Length 60%	1.0	0.36	0.20	1.80

FIG. 11. Haunched Beams — Values of 1/C.

End Rotation Constants for Haunched Beams. The subject of constants for end rotation by which the stiffness of a beam may be multiplied in order to distribute moments directly without successive con-

vergence is discussed in Chapter IV. A few approximate values for certain assumed free lengths of span are tabulated in Fig. 11 for convenience.

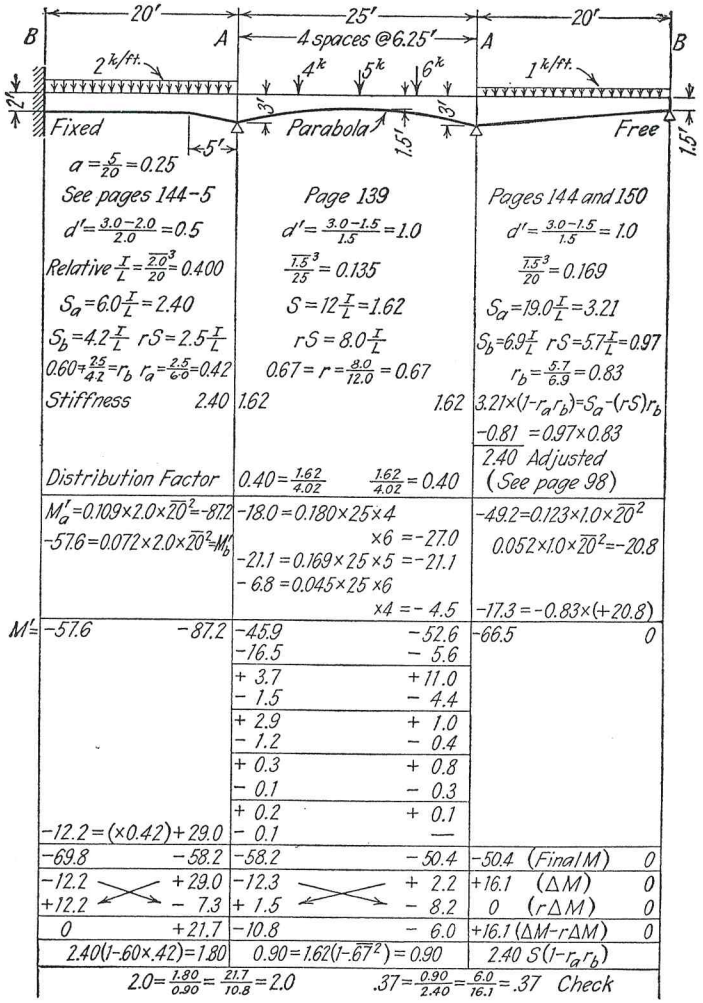

FIG. 12. Continuous Haunched Beams.

Problems — Figs. 12 and 13. The solutions shown for these problems are approximate and the arrangement of computations is not especially recommended. They are included for practice in using the curves. In Fig. 12 the effect of the girder flange has been neglected.

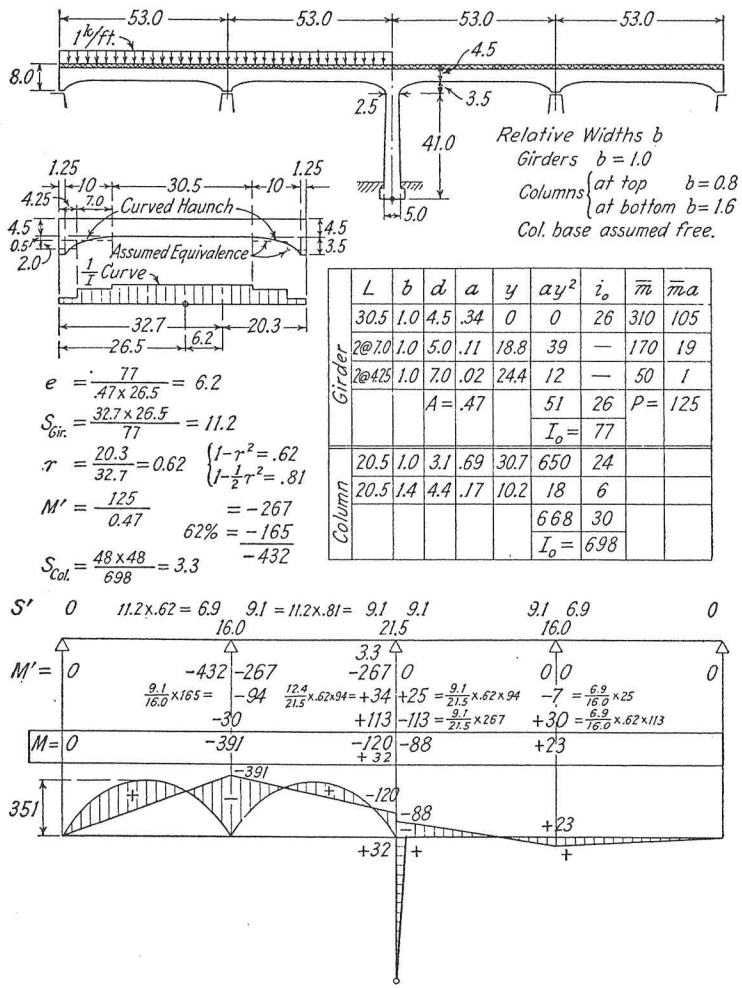

FIG. 13. Haunched Beams in Viaduct.

Properties of Haunched Beams and Columns

Below will be found curves* for various computed properties of haunched beams and columns. These include:

* In the 1927 Transactions of the American Society of Civil Engineers, Walter Ruppel presented an extensive set of tables of derived properties of haunched beams following the previous work of Strassner. These included three types of haunches: straight, parabolic and sharply curved. In the same year, T.S.Sih, graduate student at the University of Illinois, in preparation of his master's thesis, "Haunched Beams

(*a*) Influence lines for fixed-end moments and coefficients for fixed-end moments for full uniform load.

(*b*) Stiffness, S.

(*c*) Carry-over factor, r. To be found from the quantity rS.

Two points should be recognized in using such curves:

(*a*) They are not absolutely exact, but are exact only for certain assumptions as to the variation of I. These diagrams have been prepared on the assumption that $I \propto d^3$. If the beam is of T-section, this is not correct and an equivalent haunched beam in which $d \propto \sqrt[3]{I}$ should be drawn in order to select the proper curve.

(*b*) It should be recognized that the haunch for beams is supposed to extend to the center line of column. Thus if the elevation at the junc-

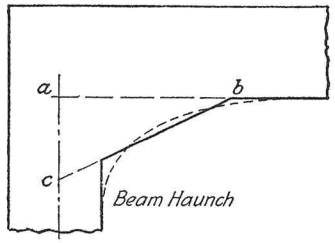

Fig. 14. Haunches — Straight and Curved.

tion of beam and column is as shown by the heavy lines in Fig. 14 we must assume a haunch such as *abc*. Evidently the diagram used for haunch *abc* is not quite exact for the actual haunch.

in Building Construction," plotted influence lines and curves of the type reproduced in this chapter.

In 1931, in the Journal of the American Concrete Institute, L. T. Evans presented many of the curves reproduced in this chapter. Figs. 15–20, 22, 25–28 and 32, inclusive, with slight modification of arrangement and notation to accord with the text, were taken from his paper. Figs. 21, 23, 24 and 25 were replotted from the work of Sih. It was not thought necessary to include separate diagrams for curved haunches (except in the case of full parabola shown in Fig. 15) as their effect can be estimated by substituting a straight line, such as shown by the full line in Fig. 14, for the curved line shown dotted.

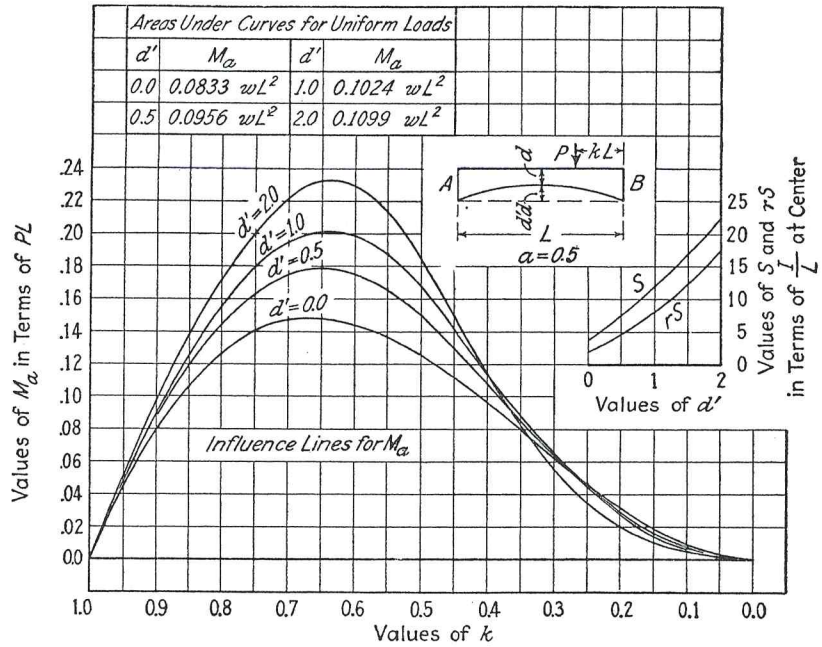

Fig. 15. Full Parabolic Haunches — Influence Lines, Stiffness and Carry-over.

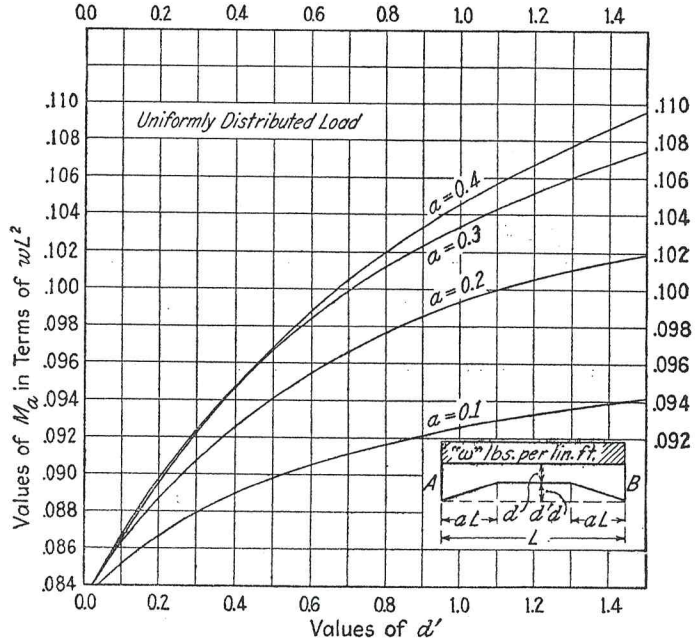

Fig. 16. Symmetrical Straight Haunches — F.E.M. — Full Loading.

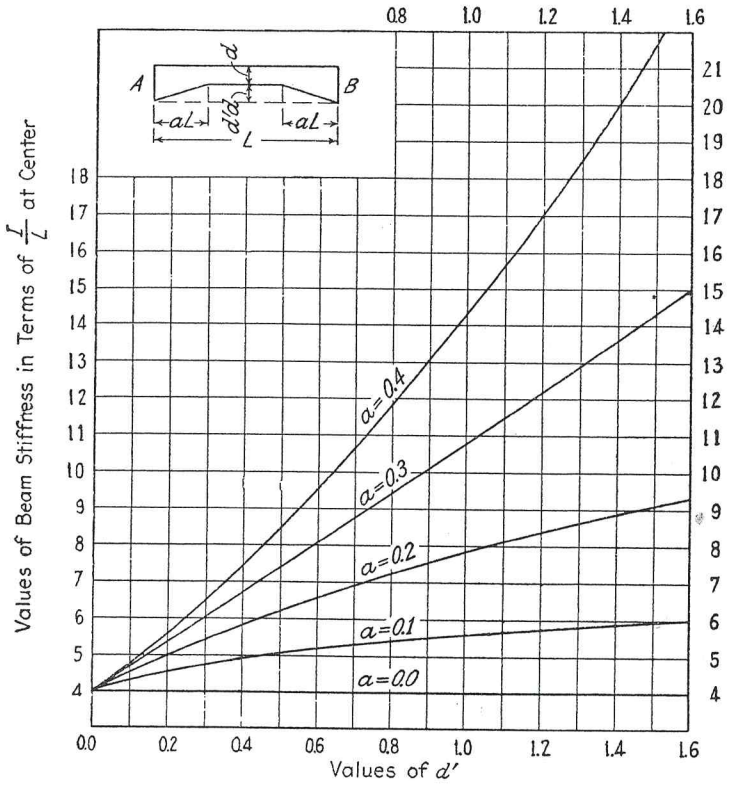

FIG. 17. Symmetrical Straight Haunches — Stiffness.

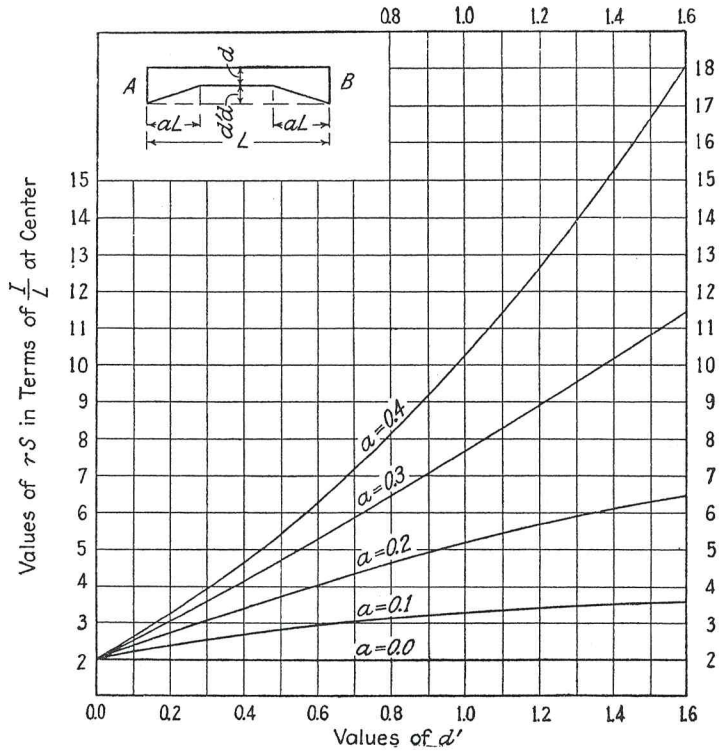

FIG. 18. Symmetrical Straight Haunches — Carry-over.

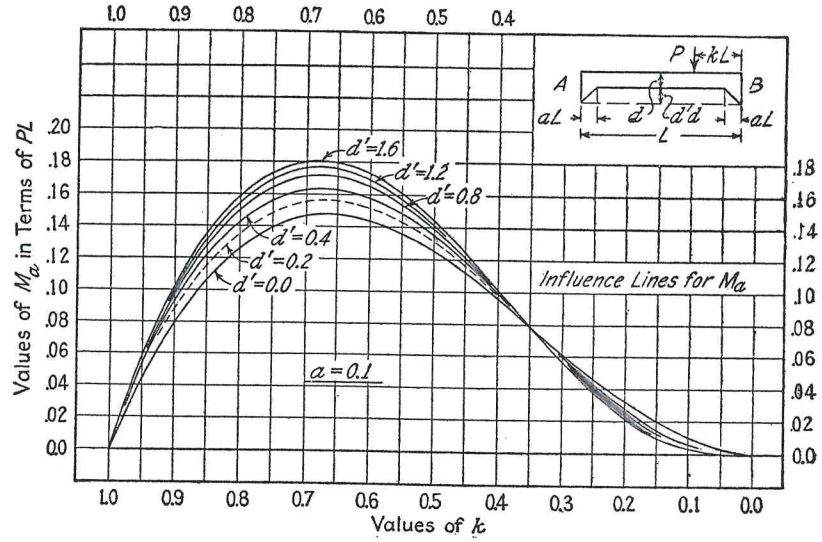

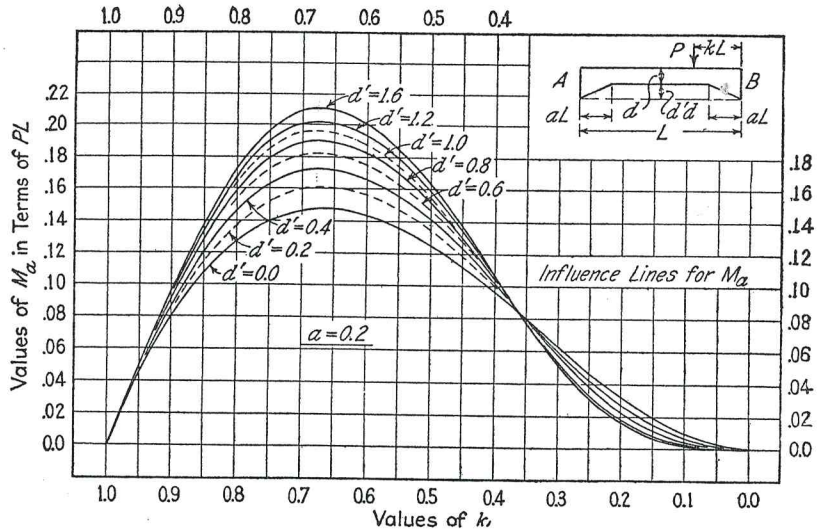

FIG. 19. Symmetrical Straight Haunches — F.E.M. — Influence Lines.

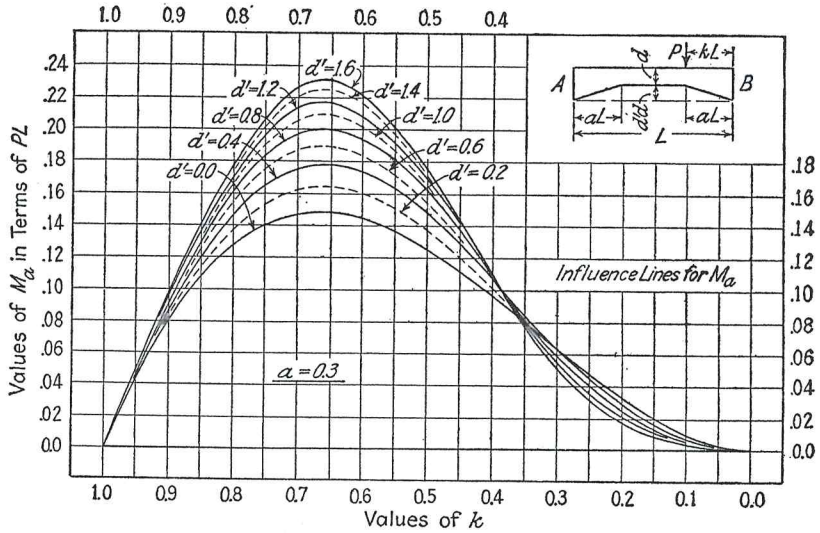

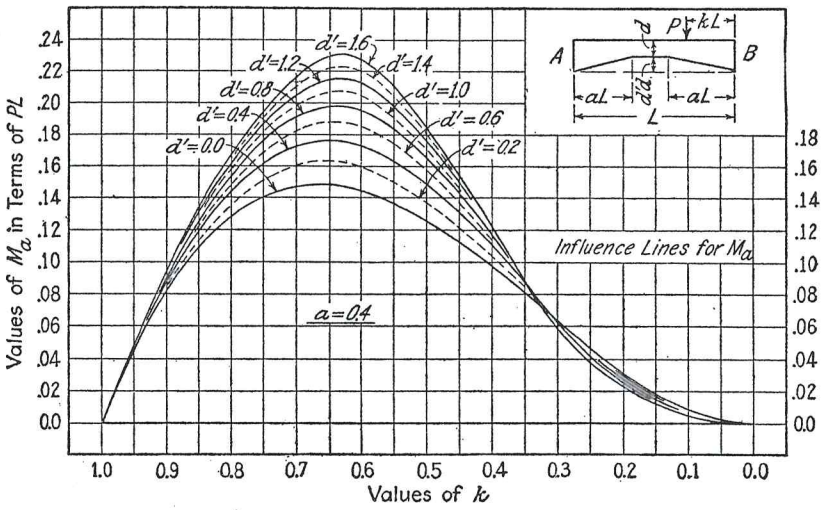

FIG. 20. Symmetrical Straight Haunches — F.E.M. — Influence Lines.

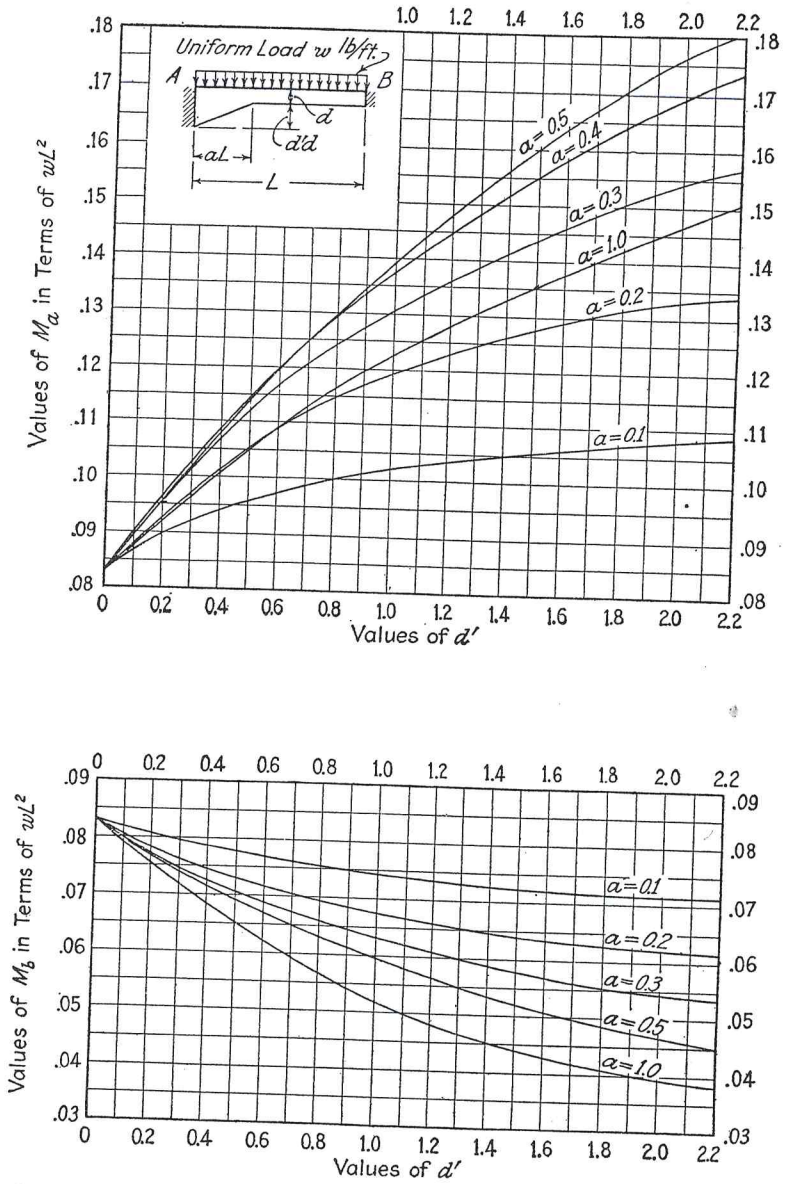

FIG. 21. Unsymmetrical Straight Haunches — F.E.M. — Full Loading.

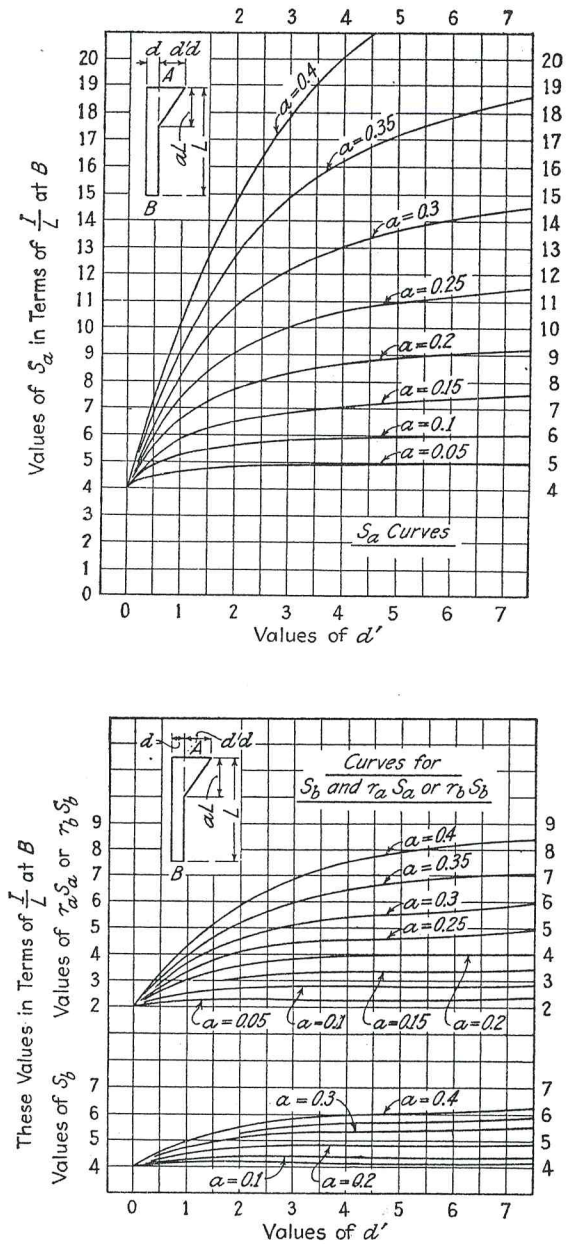

FIG. 22. Unsymmetrical Straight Haunches — Stiffness and Carry-over.

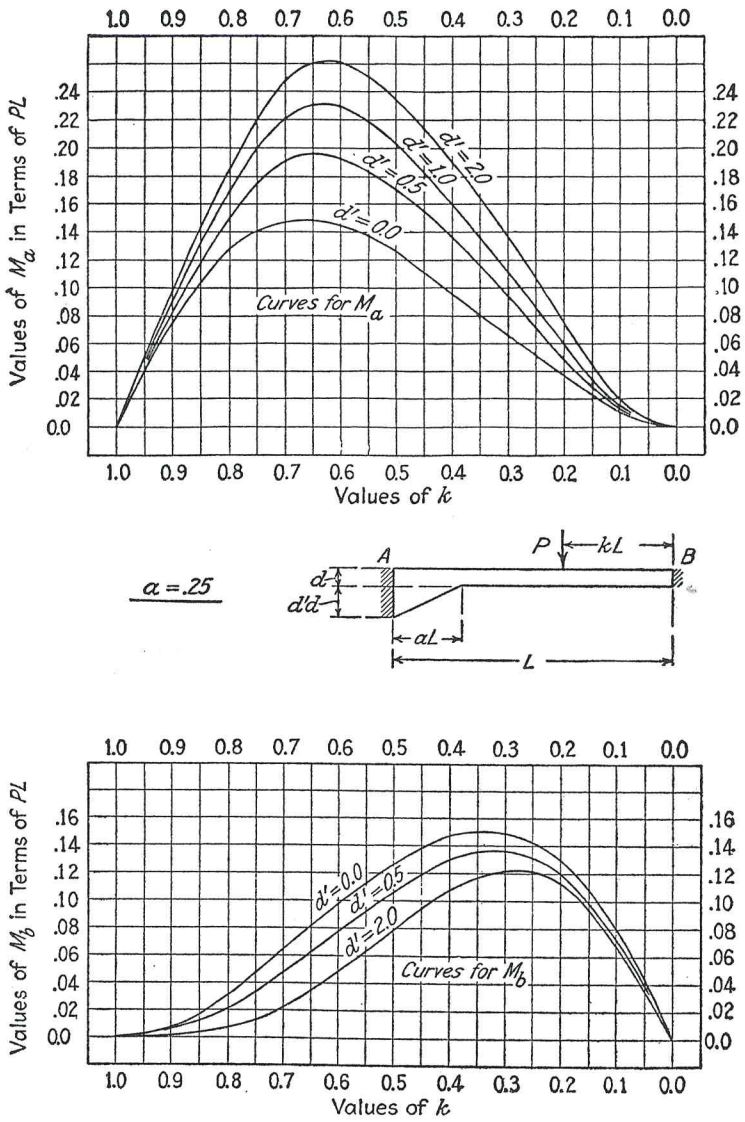

Fig. 23. Unsymmetrical Straight Haunches — F.E.M. — Influence Lines.

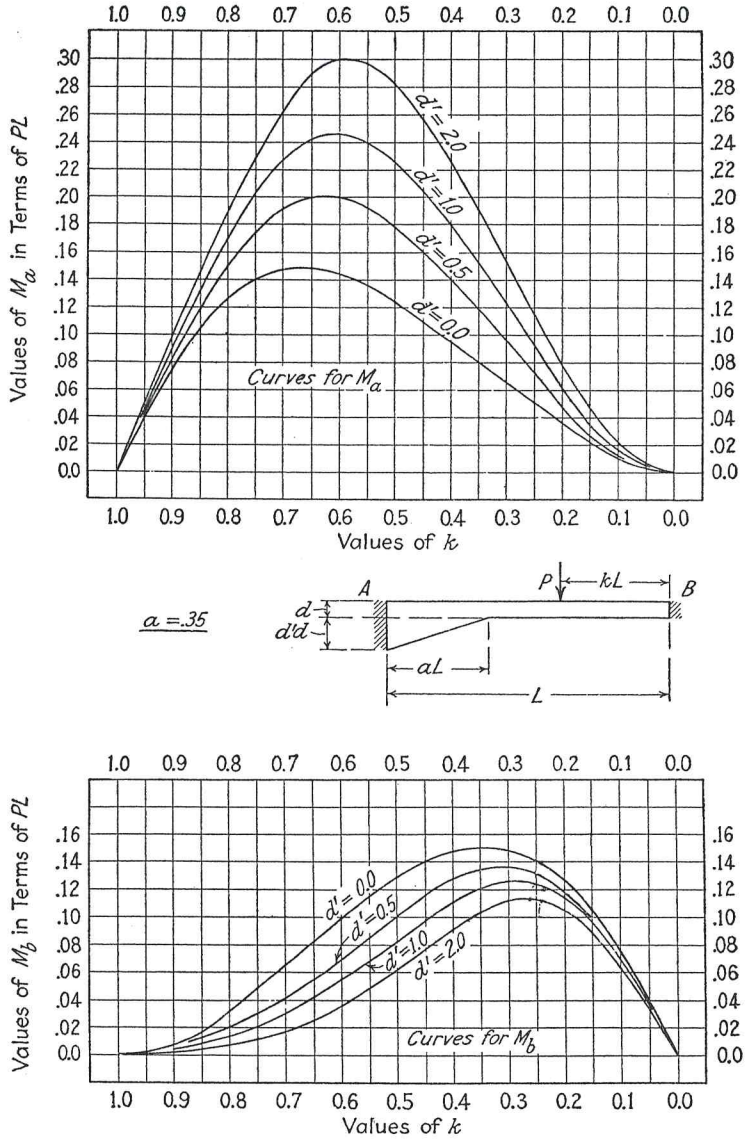

Fig. 24. Unsymmetrical Straight Haunches — F.E.M. — Influence Lines.

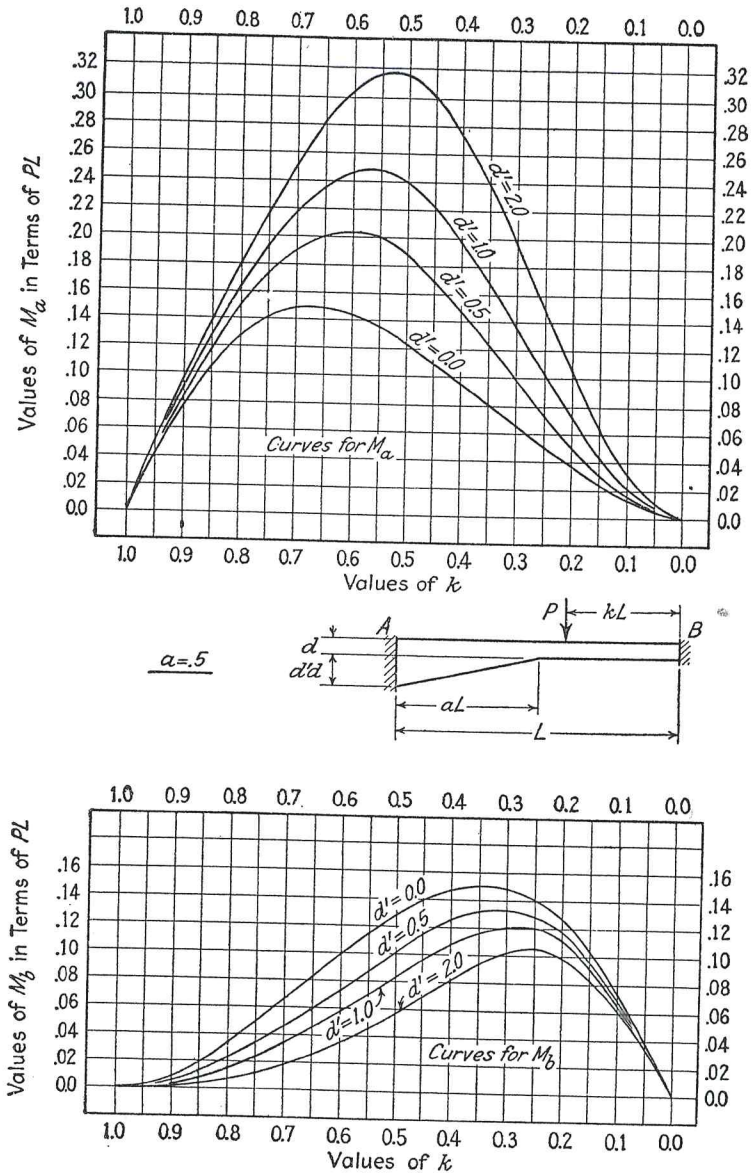

FIG. 25. Unsymmetrical Straight Haunches — F.E.M. — Influence Lines.

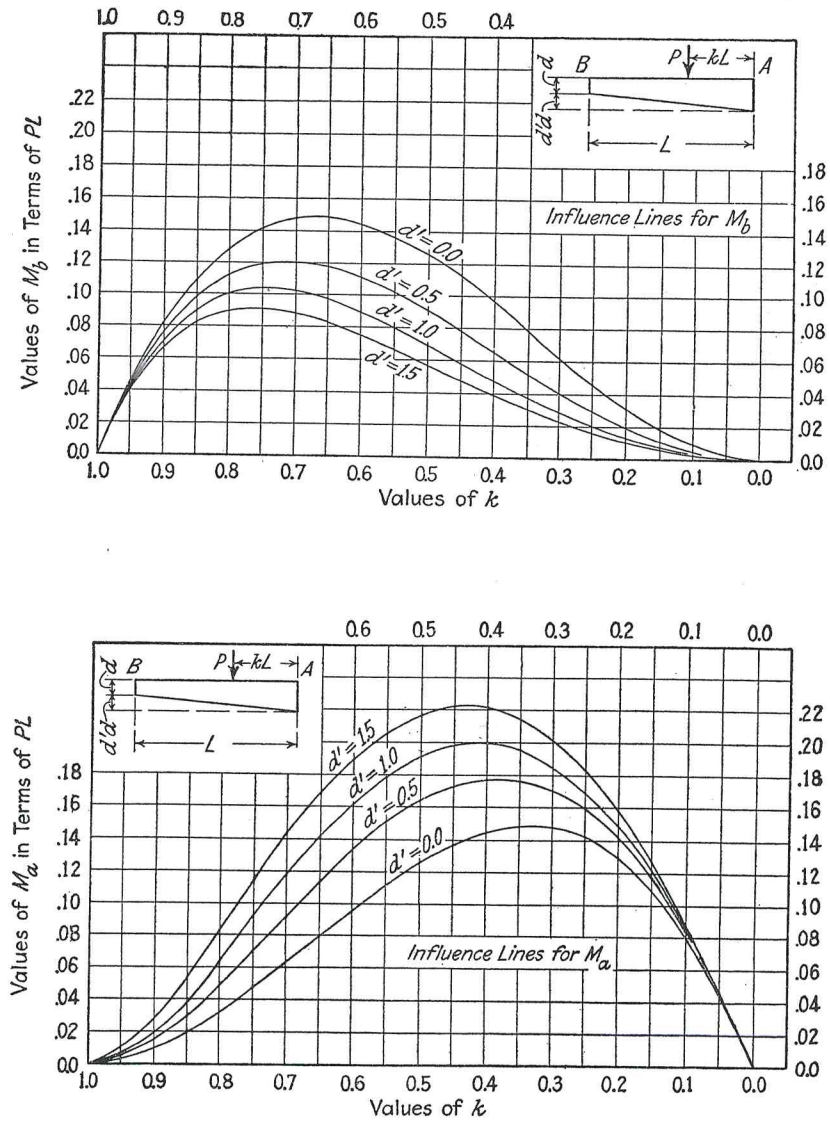

FIG. 26. Full Straight Haunches — F.E.M. — Influence Lines.
(For Full Loading, see Fig. 21.)

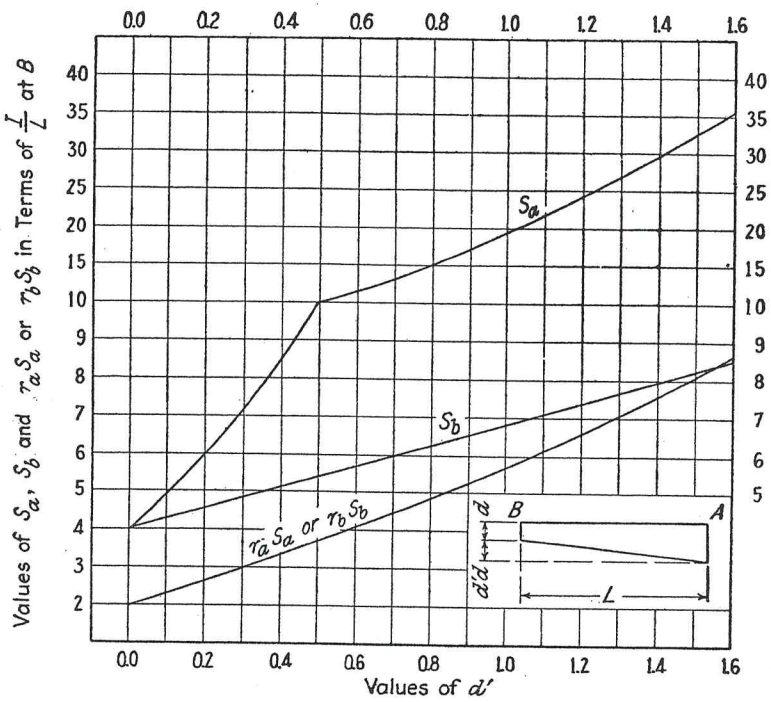

FIG. 27. Full Straight Haunches — Stiffness and Carry-over.

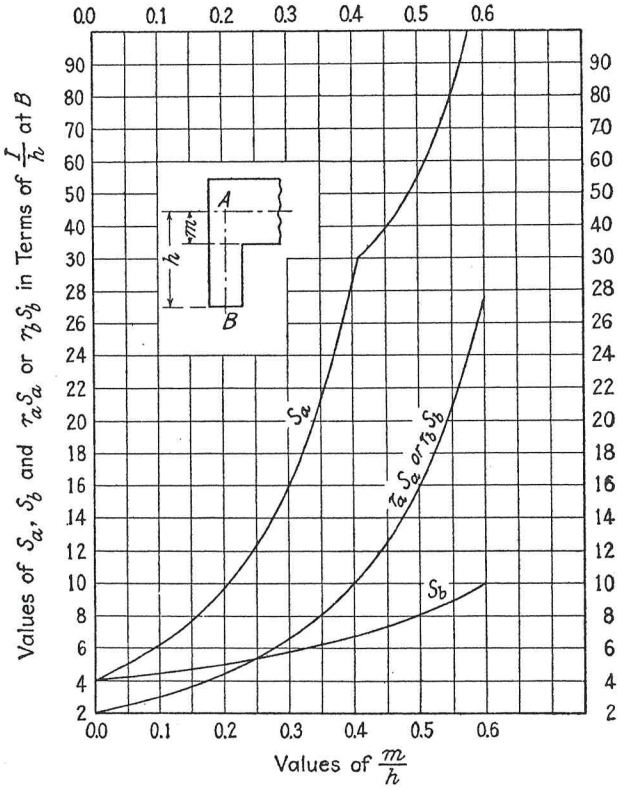

FIG. 28. Joints at Intersections — One End Only — Stiffness and Carry-over.

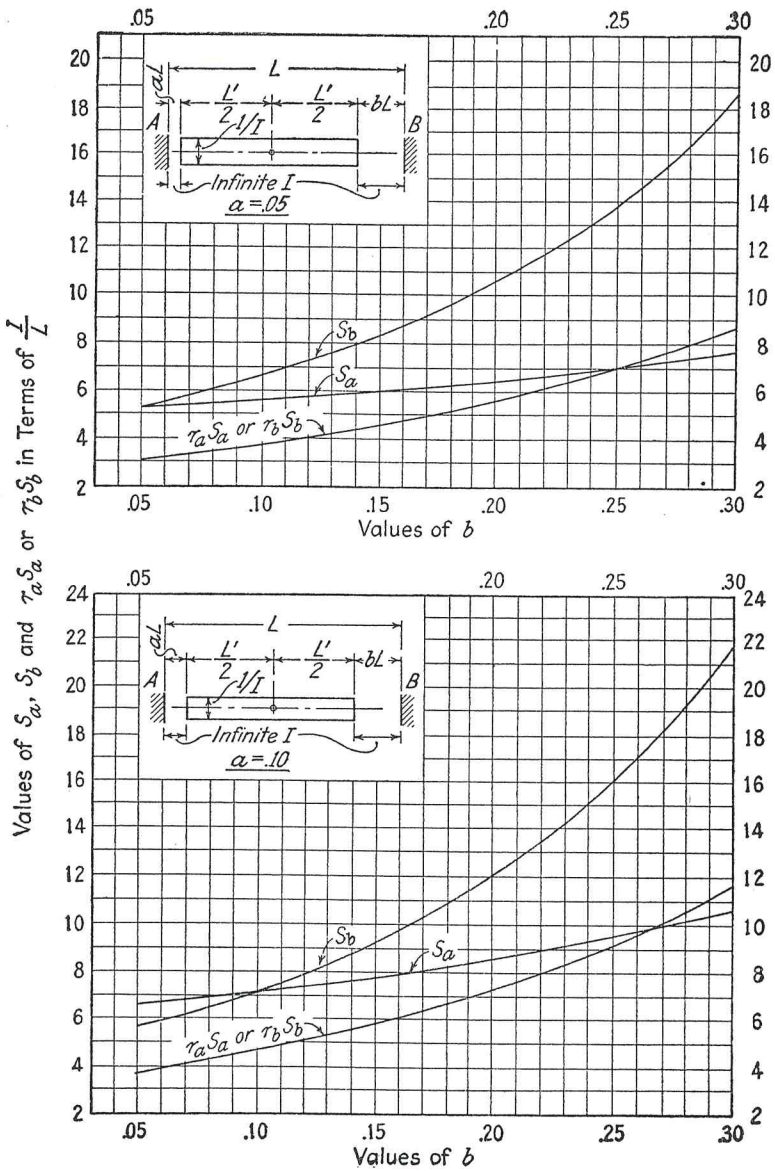

FIG. 29. Joints at Intersections — Stiffness and Carry-over.

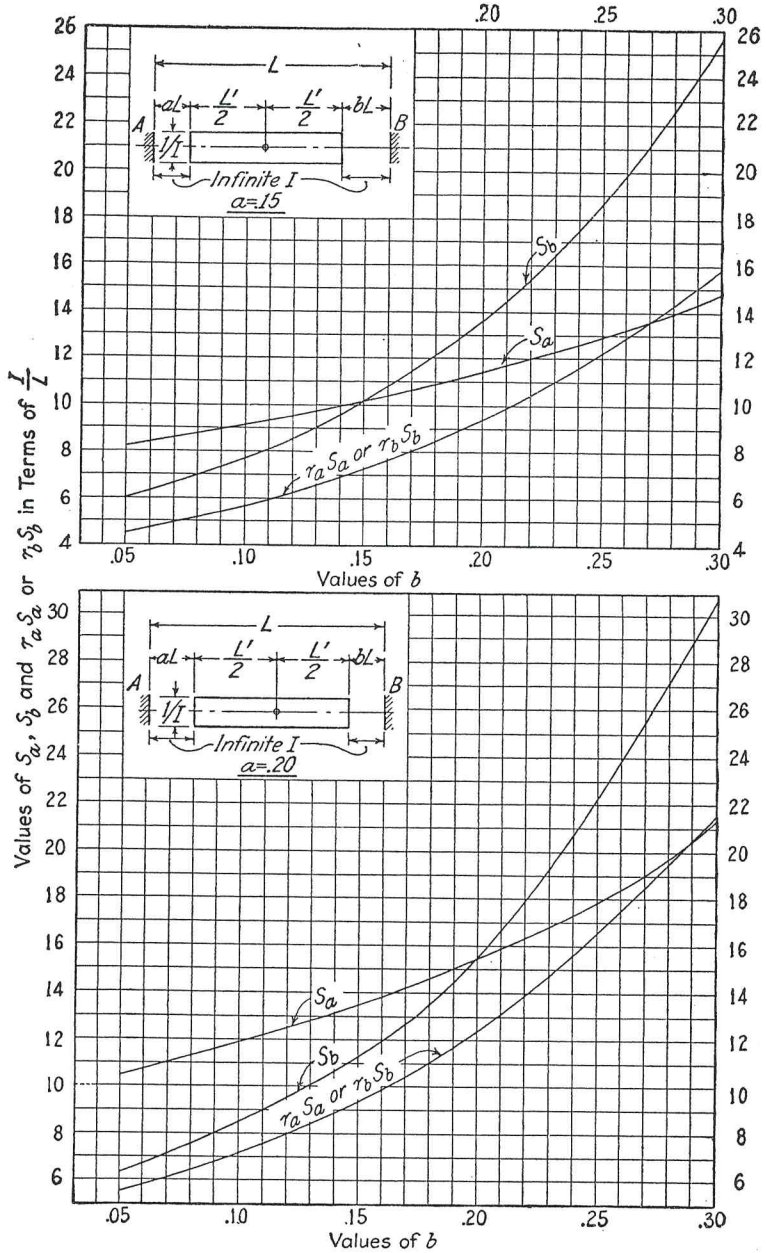

FIG. 30. Joints at Intersections — Stiffness and Carry-over.

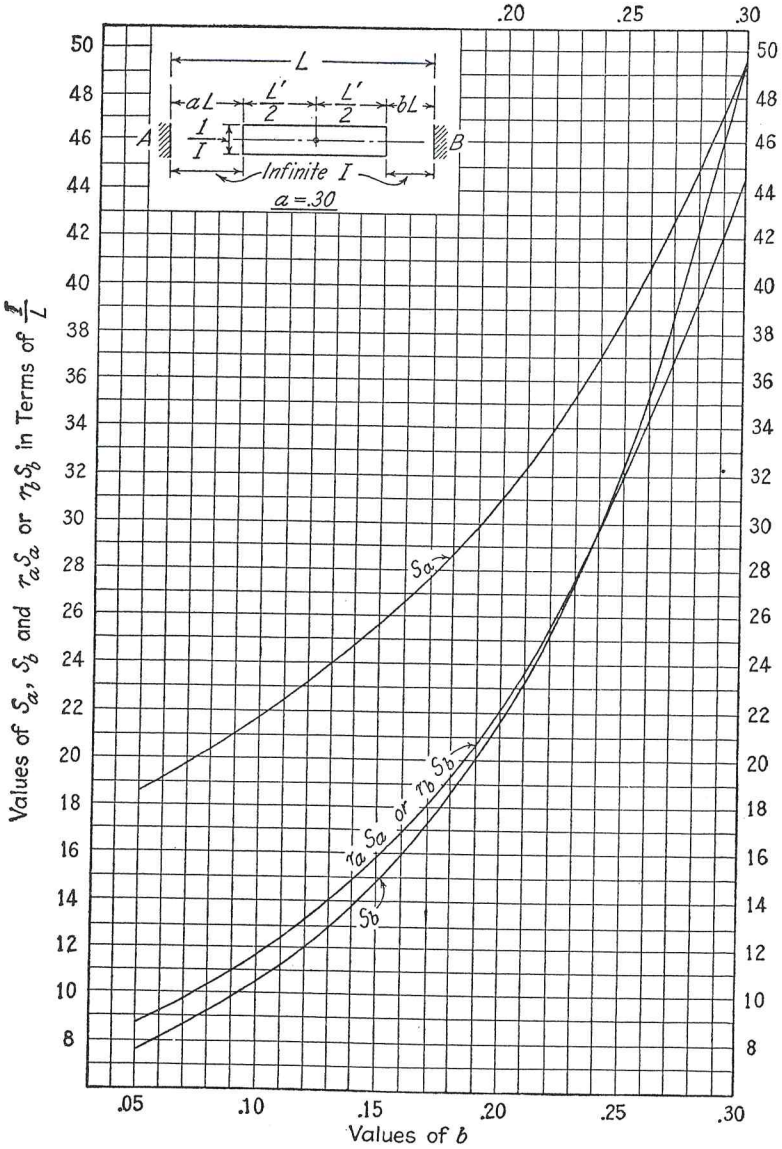

FIG. 31. Joints at Intersections — Stiffness and Carry-over.

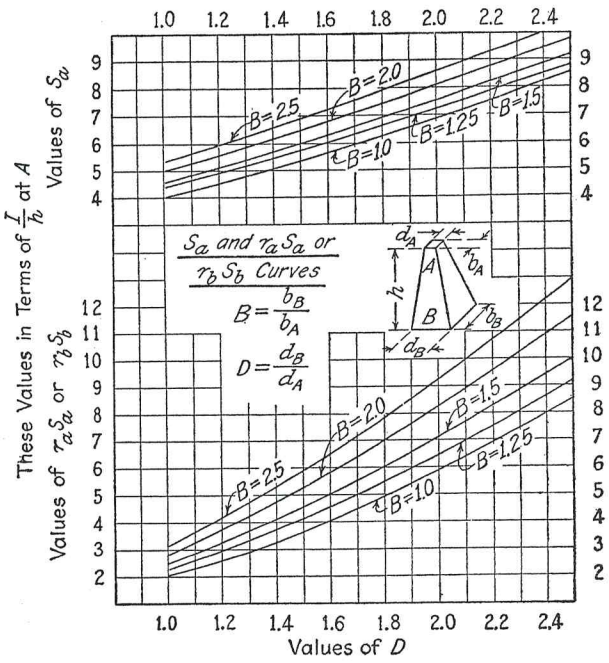

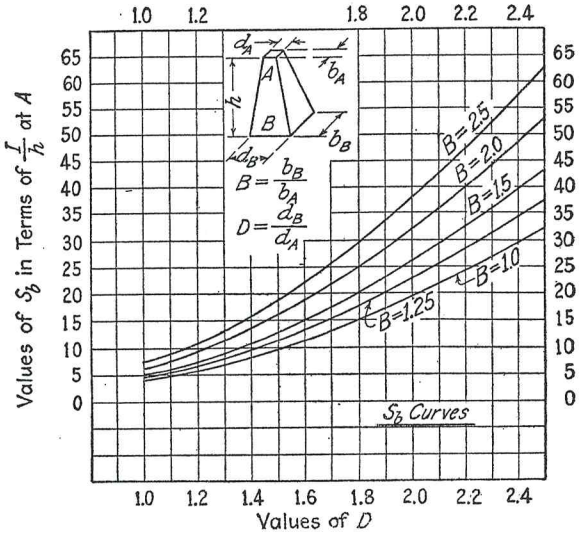

FIG. 32. Battered Piers — Stiffness and Carry-over.

CHAPTER VI

CONTINUOUS GIRDERS — MAXIMUM MOMENTS, SHEARS AND REACTIONS

A. Elementary Procedure

Analysis of a structure for a single condition of loading is only a small part of the problem of analysis for design. A solution adequate for the design of a continuous girder, for example, must lead to values for maximum positive and maximum negative moments in the girders, maximum shears in the girders, and maximum moments in the columns. Because these involve several combinations of loading, any method of analysis employed is of little practical value unless it is rapid as well as accurate.

Where the live load is uniformly distributed, whether applied to the girders directly or through floor beams, we may get all data for the more important maximum values by combining the effect of full live loading of the separate spans. Where moving concentrated loads are involved, as in the case of crane loads on continuous crane girders or of street cars on continuous viaducts, we may move these across the structure. For railway loading, an equivalent uniform load may ordinarily be used, at least for preliminary design.

For uniform loads proceed as follows:

(*a*) Load each span successively with live load, draw the curve of moments on girders, compute end shears on girders, find loads and moments in columns.

(*b*) Add for all girders loaded, multiply by ratio of dead to live load and so find values for dead load.

(*c*) Combine values for dead load with all positive values for live loads for positive maxima and with all negative values for negative maxima.

If the live load specified is a series of moving concentrated loads such as a truck, trolley car or railway train, move the load by successive steps across the bridge, draw curve of moments and find shears and column moments for each position; compute values for dead load; combine for maxima.

These procedures are applicable whether the members are of constant section or not. If, for any maximum value, sidesway is evidently an

important factor, the unbalanced shear in the columns should be computed, and correction should be made by treating this as a wind load using approximate methods of analysis, or in rare cases by using exact methods of analysis.

This is really about all that it is necessary to know. Certain additional phases of the problem of maxima are brought out in this chapter and in that on influence lines.

For points near the supports — as far as about the quarter-point of the span — maximum moments do not occur with full loading of a series of spans, but with partial loading of one span and full loading of other spans. Moreover, maximum shears, except at the extreme end of the span, never occur with full loading of all loaded spans. In most cases, however, loading of parts of spans is not very important, since the maximum negative moment at the support is found with full loading of the loaded spans and there is considerable uncertainty as to the significance of the maximum shears at points other than the edge of the support.

Moving Concentrated Loads. Where the live load is a series of concentrated loads — trucks, trolley cars or railway loads — the authors find it convenient to get maxima by the elementary procedure of moving the loads across the bridge and determining the moments produced. It is convenient to have an approximate idea of the shape of the influence lines as an aid in spotting the loads, but it is not necessary.

In order to avoid repetition of computations, we first draw the two influence lines for fixed-end moments in each span. Then distribute unbalanced moments of 100 successively at each support. Now, with the loads in any given position, scale the ordinates of the influence lines for fixed-end moments, multiply by the loads and so find the total fixed-end moments, distribute these by use of the factors just determined. The curve of moments for this position of the loads is then easily drawn. The envelopes of all curves of moments are the curves of maximum moments.

If curves of maximum shears are wanted, they may be got by a similar procedure.

Illustration of Computation of Shears and Moments with Concentrated Load Systems. Fig. 1 illustrates the determination of all values of shears and moments in a frame of two spans for one position of a locomotive. A series of such values are to be found for successive positions of the locomotive and maxima determined in this way. It is assumed that the structure is of such importance as to make accurate curves of maxima for actual wheel loads worth while.

The essential steps in the procedure are (*a*) the influence lines for

fixed-end moments, to be determined either by the column analogy or from curves, (*b*) the distribution of unbalanced moments at each joint except the end which is freely supported, (*c*) the force polygon and string

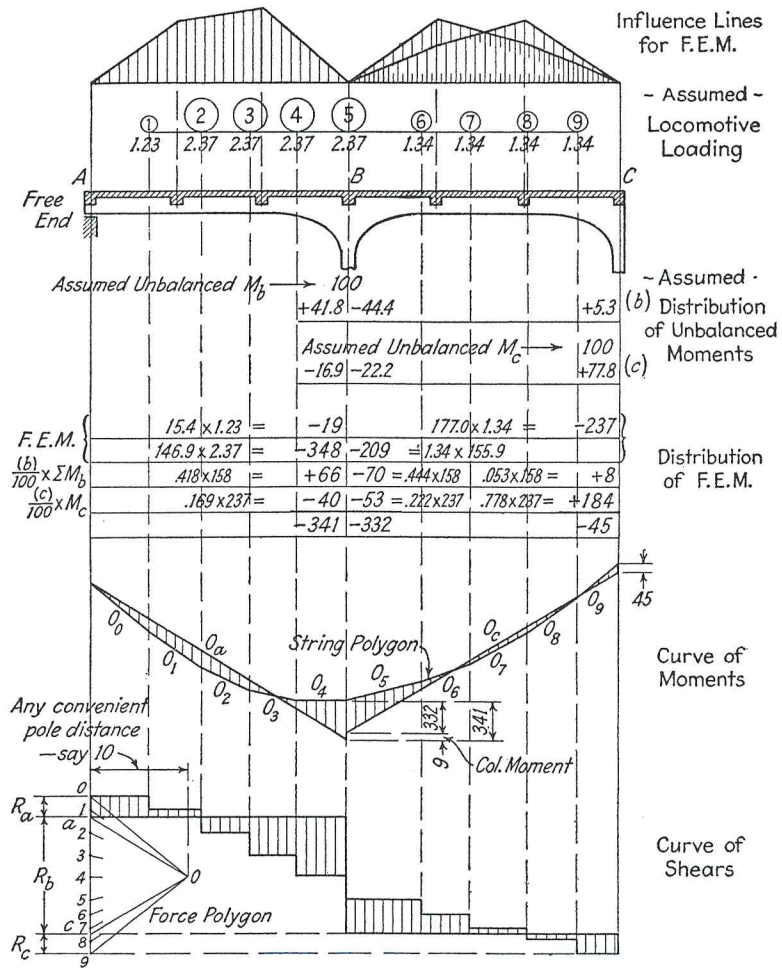

FIG. 1. Continuous Viaduct — Moving Concentrated Loads. Moments and Shears.

polygon for the loads. These are used over and over for each different position of the loads and should be determined with accuracy.

The loads are now placed on the structure in some position. Scale the influence ordinates for fixed-end moments, multiply by the loads and set the totals at the corresponding beam ends. Multiply by the distribution factors and find total end moments. Lay off these end

moments from the string polygon for the loads and draw the closing lines as shown.* This gives at once the complete curve of moments. If we draw in the force polygon rays parallel to these closing lines, these rays divide the load polygon into the reactions. We can then project over the end shears and the forces to give the curve of shears on the span.

After the curves of moments and shears are drawn for all positions of the load which are to be considered, the values for maxima may be plotted and the curves of maxima drawn.

Use of Influence Lines. If the above procedure is used, the influence lines, if used at all, would be merely sketched as a guide in spotting the loads. If, however, the computer wishes to draw them to scale, he may follow the procedure just explained, drawing curves of moments and shears for successive positions of a unit load and taking from these such values as are wanted in plotting the influence lines.

Beams of Constant Section. Influence lines for the fixed-end moments on prismatic beams are readily constructed from the single relation that the moment which would exist under the load on a simple beam is distributed to the ends as fixed-end moments in inverse proportion to the segments of the span. Hence the sum of the end moments equals the moment under the load on a simple beam. The latter value varies, as the load moves along the beam, as the ordinates to a parabola of center ordinate $L/4$. The ordinates of this parabola are then divided in the ratio of the segments of the span to give the two influence lines.

If one end of the beam is freely supported, half of the fixed moment which is released at that end goes to the other end. Hence the influence line for moment at the fixed end when the other end is free may be got by adding one-half the ordinates for fixed-end moment at the end which is free.

Haunched Beams. To draw influence lines for end moments on haunched beams we may use the approximate method in which a clear span length is assumed, as explained in Chapter V. For many cases, influence lines will be found in the curves of Chapter V. In cases not covered by the curves, where accuracy is desired, place unit loads at various positions on the span and find the end moments by the column analogy.

Design Procedure. Two things which seem to have received very little attention in the literature of the subject are quite essential to the proper development of indeterminate structures. These are, first, the development of methods of analysis which are rapid enough to put the

* Ordinates to the string polygon, multiplied by the pole distance, give the bending moments.

structure quickly into shape for detailing and estimating and yet accurate enough so that no great change will be required after more exact analysis. Second, that the final " exact " analysis shall follow step by step the analysis on which the design is based and so check it and be checked by it. The " exact " analysis should be for assurance that the approximations used in the design have not been too crude; it should not itself be a design procedure.

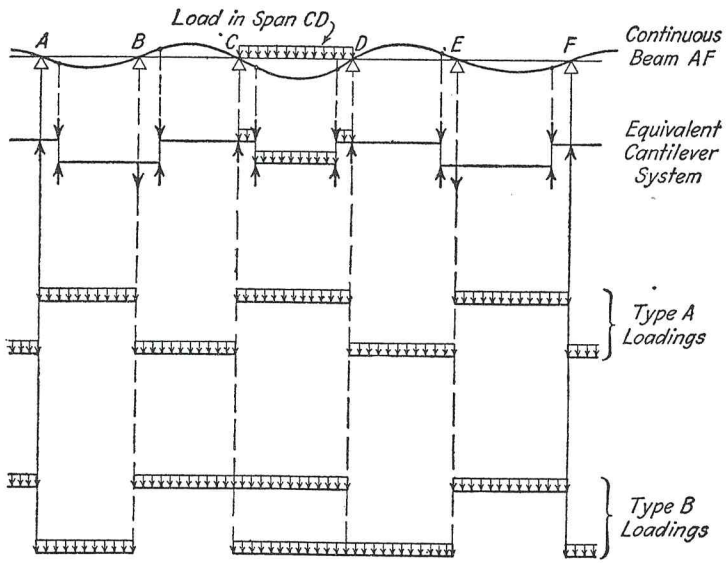

FIG. 2. Continuous Girders — Loadings for Maxima.

In the design of important continuous structures of variable section for moving concentrated loads, therefore, the following procedure is recommended.

(*a*) *Preliminary Design Procedure.*
(1) Draw the influence lines for fixed-end moments for prismatic beams and modify them so far as possible for expected haunching.
(2) Determine the effect of distributing such moments.
(3) Sketch approximate influence lines for moments, shears and reactions to guide in spotting the loads.
(4) Compute maxima and complete design.
(*b*) *Final Analysis.*
(5) Revise (1) and (2) above from the proportions used in the design.
(6) Revise maxima and see if design is affected.

Types of Loading for Maxima — Uniform Loads. Accepting, for the present, the condition that we will consider only full loading of certain spans, it is not difficult to see what spans should be loaded with live load to produce maxima. Thus, by drawing the deflected structure for load in span CD, Fig. 2, we see that this load produces:

(*a*) Positive moment at the center of CD, AB and EF.
(*b*) Negative moment at the center of BC and DE.
(*c*) Negative moment in the girder at C and D, A and F.
(*d*) Positive moment in the girder at B and E.
(*e*) Normal shear (positive at the left end of the girder and negative at the right end of the girder) at C and D in CD, at C in BC and at D in DE, at A in AB and at F in EF.
(*f*) Upward reactions at C and D, A and F.
(*g*) Negative moments in the columns at A, C, E. Positive moments in the columns at B, D, F

This indicates at once the loadings required for maxima. They reduce to two types.

Type A: By loading alternate spans with live load we get:
maximum positive moments at centers of loaded spans;
maximum negative moments at centers of unloaded spans;
maximum moments in all columns, of alternate signs in successive columns.

Type B: By loading two adjoining spans with live load and then loading alternate spans beyond these, we get at the support between the two adjoining spans:
maximum negative moments;
maximum shears;
maximum reactions.

Only two types of loading, then, are involved. Of these there are two loadings for type A and for type B as many different loadings as supports. If the number of spans is odd, two of the type B loadings are the same and are also the same as one of the type A loadings. If the number of spans is even, two of the type B loadings are the same as the two type A loadings. In any case, then, as many combinations of loading are involved as there are supports of the girder.

Methods of Drawing Curves of Maxima. The most obvious thing to do, then, is to find from these different loadings the maximum values that we want. We can reduce the amount of work slightly by loading one span at a time with live load and then getting the maxima desired by addition. This saves one process of moment distribution and substi-

tutes for it some addition; the saving in time is not great. Fig. 3 shows typical curves of moment for the different conditions of loading and points out certain interesting relations of the shears.

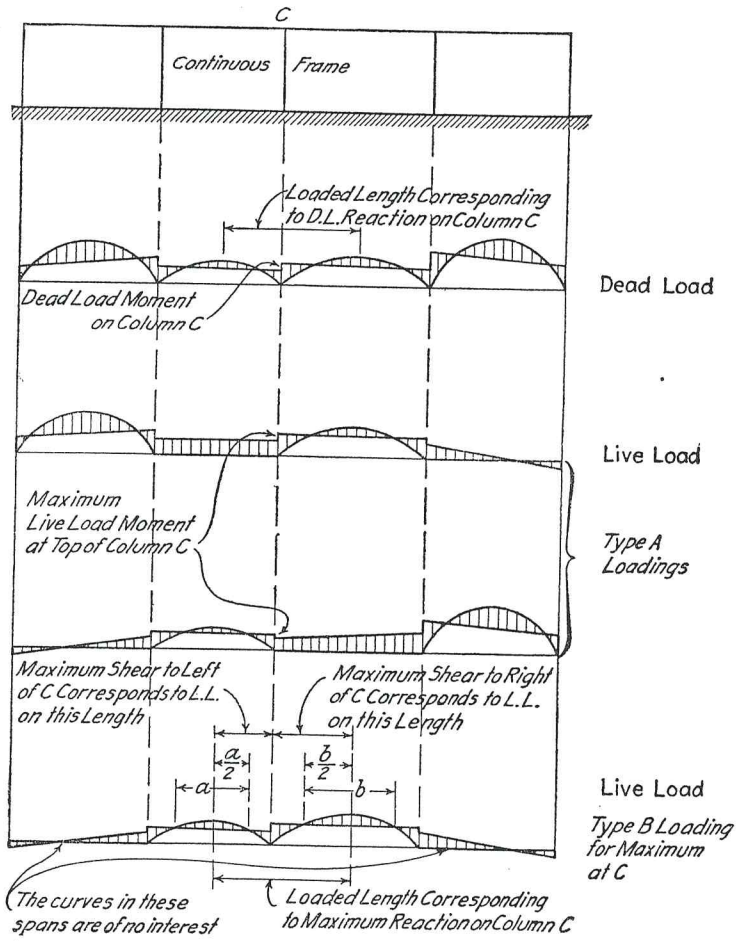

FIG. 3. Continuous Frames — Shear and Moment Relations.

Maximum Column Moments. Maximum moments in the columns just indicated are correct if the column is bent only by flexure of the girder under consideration. Maximum moments in the columns of buildings, however, occur from loadings on floors both above and below the column. See Fig. 4. In buildings, for this loading, maximum stress occurs both at top and bottom of the column, the point of in-

flection being at the midpoint if the framing is the same on successive floors.

In column AB, maximum moment at A, Fig. 4 (a), occurs when: (a) the unbalanced moment at A is maximum; (b) the stiffness of the column at A is maximum and that of other members connecting at A is minimum. This indicates approximately the loading shown. For the column, $1/C = 3/2$; for the girder AC, $1/C = 1/2$; for the column AD and the girder AE, $1/C$ is whatever the end restraints determine — say $7/8$.

If the column is a wall column the same relations apply approximately except that $1/C$ for AC, Fig. 4 (b), is slightly greater than $1/2$.

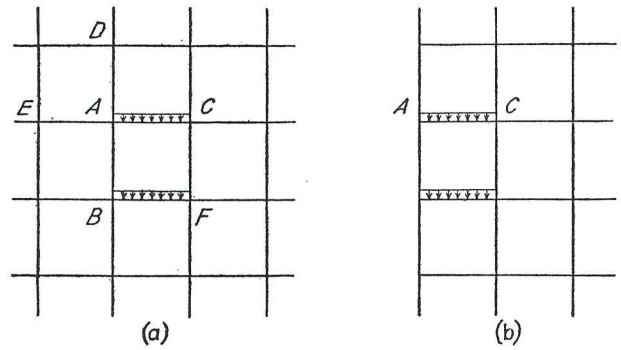

FIG. 4. Column Moments — Live Loads for Approximate Maxima.

A corner column is like any other wall column except that it is subject to bending in two directions. A roof column differs chiefly in omitting the connecting column at A. The whole subject will be found worth further study by comparing approximate and exact values.

Interior columns are usually subject to very little moment from dead load, whereas wall columns are subject to moment from both dead and live load.

The relations are not so simple as here indicated, however, because: (a) allowance should be made for the stiffening effect produced in the column by junction with the girder, the moment of inertia of the column being very great (infinite) after it joins the girder; (b) if the girders are haunched the lower column takes more moment than does the upper column; (c) the moment found above is not very significant and must be corrected to give the moment at the top or at the bottom of the girder.

Maximum Shears. Maximum shears have been neglected to a large extent in the literature of continuity. Since the loading which will

produce maximum end shears is the same as the loading for maximum end moments, the maxima are easily determined. They are best found by adding to the end shears which would exist if the beam were simply supported the change in shear due to the end moments. The latter are found by statics as the difference between the end moments divided by the span length, the shear being increased at that end of the span where the negative moment is greater.

B. Exact Curves of Maxima

The discussion of maximum moments and shears in continuous girders as given above is deficient in neglecting the effect of partial loading of

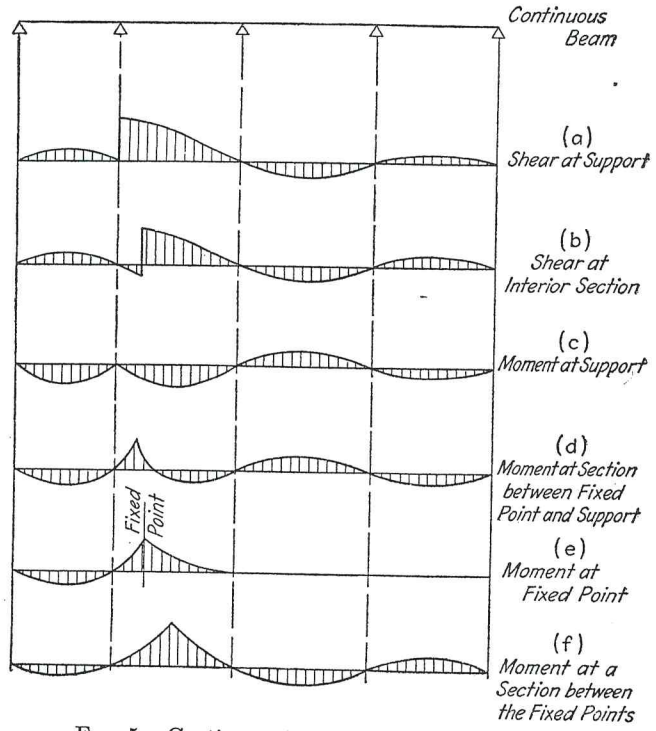

FIG. 5. Continuous Beam — Influence Lines.

some of the spans. This affects the maximum moments at points distant from the supports less than about one-quarter of the span length and the maximum shears at all points except the support.

Maximum shears at points other than the support occur with the same

loading as for maximum at the support except that the live load is omitted between the support and the point in question.

Maximum moments near the end of any span also occur for the same loading as at the end of the span except that the span in question is not fully loaded.

The influence lines are as shown in Fig. 5.

Fixed Points — Relation to Curves of Maxima. The fixed points of a span are conveniently defined for identification as the points at which no moment is produced by loads in spans lying respectively to the right or to the left of the given span, the fixed point at the left end corresponding to spans on the right, and vice versa. They are, then, easily located by moment distribution.

More significantly the fixed points are points for which the influence lines for moment change from the type shown in Fig. 5 (*d*) to that shown in (*f*). For points between the fixed point and the support, the

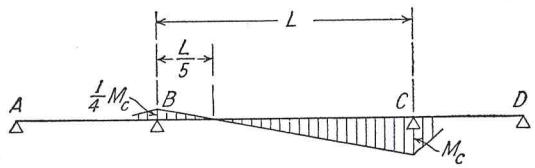

FIG. 6. Continuous Beam — Approximate Location of Fixed Points.

influence lines have the shape shown in (*d*), which indicates partial loading of the span in question.

Approximately, for a load in span CD, Fig. 6, the moment at B is $1/2 \cdot 1/2\ M_c = 1/4\ M_c$, joint B being continuous, locating the point of zero moment at $L/5$ from B, as shown in the figure. If B is fixed the moment at B will be $1/2\ M_c$, locating the fixed point at $L/3$ from B. In the case of haunched beams it will be somewhat further from the end. In beams of uniform section it will usually lie between 20 and 25% of the span length from the support. In this discussion and for ordinary purposes of design the fixed points may be assumed to be at $0.2L$ from the end of the span. Where accurate location is desired, fixed points may be readily found. In simply supported end spans one fixed point is evidently at the support.

The fixed points are significant in drawing curves of maxima because:

(1) Between the fixed points the curves of maximum moment for loads applied either directly or through cross beams have the same shape as if the beams were simply supported.

(2) For points between the fixed points and the supports, the shapes of the curves of maxima are more complicated. Two points on these

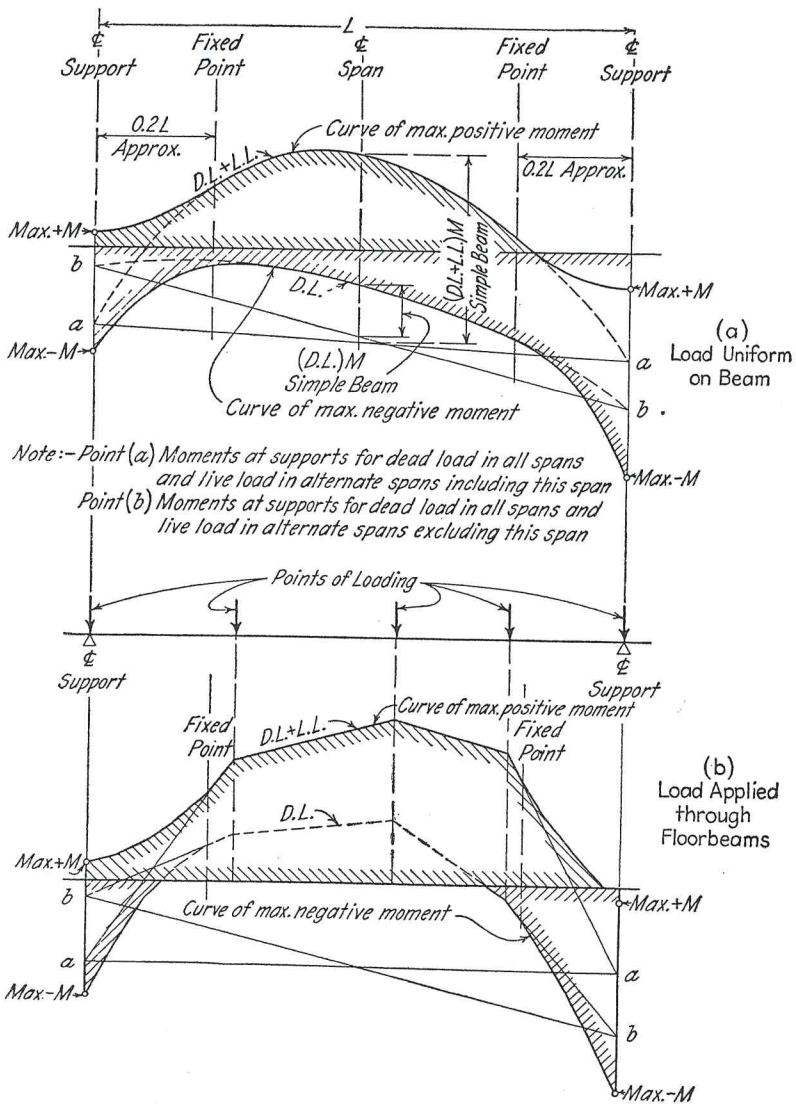

FIG. 7. Construction of Curves of Maximum Moments.

curves are known, however, one at the fixed point and one at the support, and the exact shape of this portion of the curve is not usually very important for design purposes.

Construction of Curves of Maximum Moment. For curves of maximum moment, proceed as follows:

(1) Draw the curve of moment in any span when alternate spans including this span are loaded with live load. Draw the curve of moments in this span when alternate spans not including this span are loaded with live load. In both cases all spans are loaded with dead load.

(2) Compute maximum positive and maximum negative moments at the supports.

(3) From the fixed points, which need not be very accurately located, connect the curves just drawn with the maximum values found at the supports. Where the live load is uniformly distributed, the curves will be tangent at the fixed points. Where the loads are applied by floor beams, the polygons of maximum break at each load point, at the fixed points and once between the fixed point and support for each point of loading on the span.

The construction of curves of maximum moments thus computed is shown in Figs. 7 and 8. See illustrative problems following for actual curves.

Curves of Maximum Shears. Curves of maximum shears are tedious to compute exactly, because each point requires a different partial loading of the span in question. Whether they are worth computing exactly is a matter of opinion.

Fig. 9 shows the live loadings required for maximum positive shear at three points on a continuous girder. These are the same except that the live load has been removed between support A and the section considered. Now the shear produced by loading these portions of the span with negative live load is nearly the same as if beam AB were simply supported. Hence we may first draw the curve of shears for the loading which gives maximum at A and then add the curve of maximum negative shears on span AB considered as simply supported.

Fig. 10 shows the construction for positive shears where the loads are uniformly applied and also where they are applied through floor beams. In each span there will be a similar construction for negative shears.

For purposes of computation, this may be summarized by saying that we add to the maximum shears which would exist if the beam were simply supported, the changes in shear produced by continuity under that condition of loading which produces maximum moment at the end of the beam.

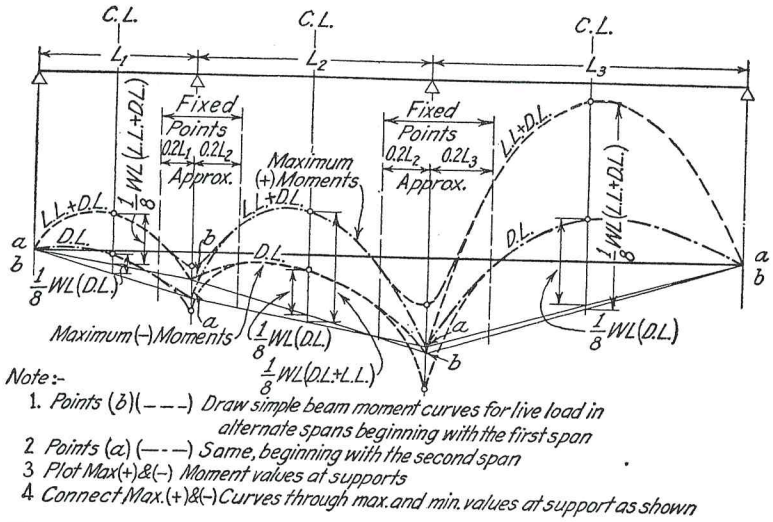

FIG. 8. Construction of Curves of Maximum Moments — Uniform Loads.

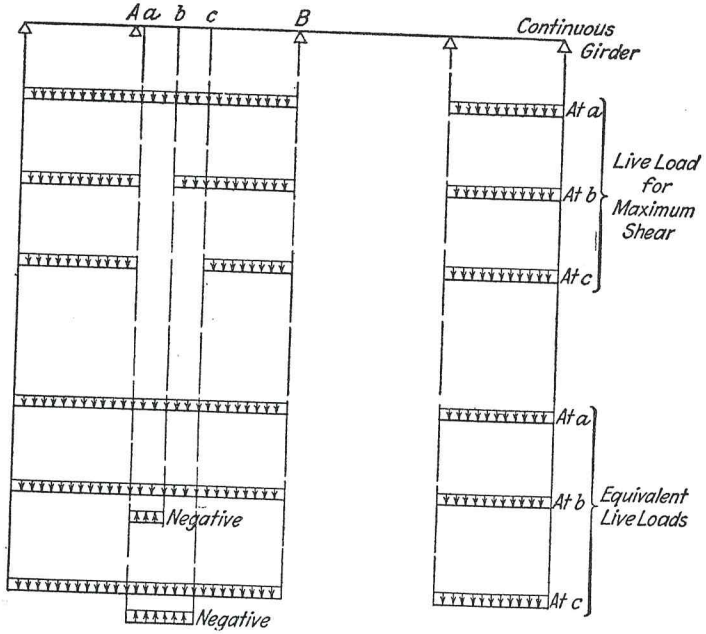

FIG. 9. Continuous Girder — Loadings for Maximum Shears.

Computations for maximum shears are shown in problems which follow later in the chapter.

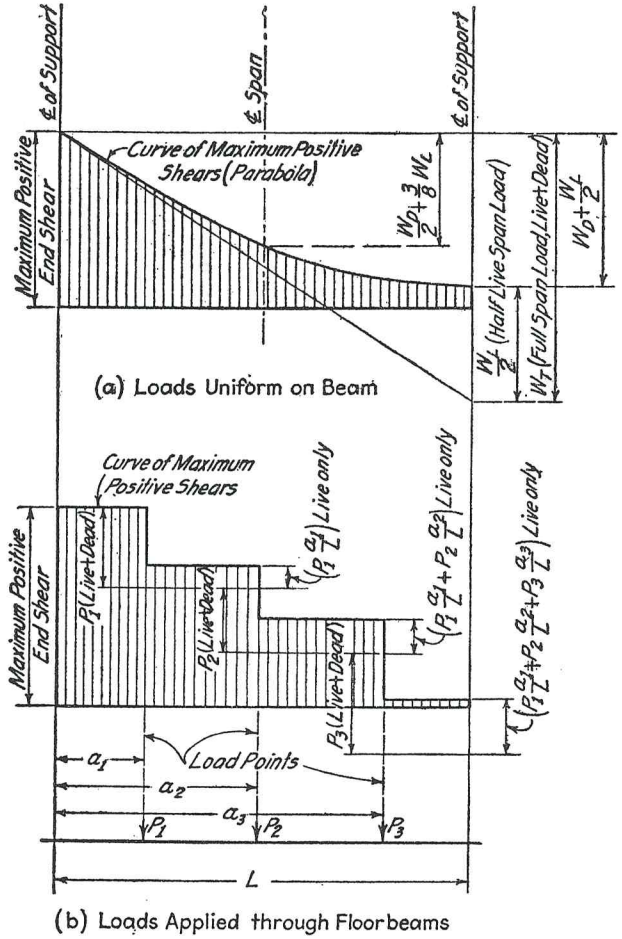

FIG. 10. Continuous Girder — Maximum Positive Shears.

C. Approximate Methods of Moment Distribution

Outline of Approximate Method. The method of moment distribution already described is rapid and accurate. In finding maxima in ordinary cases it is sometimes desirable to sacrifice some accuracy in order to save time. In this section methods of doing this are suggested and some indication is given of the sacrifice of accuracy which results.

Consider the influence of any one unbalanced moment in a continu-

ous frame. If all the members connected at any joint were fixed against rotation at their far ends this unbalanced moment would be distributed among them in proportion to their I/L values and there would be produced at the other end of each member a moment of opposite sign and equal to one-half of this distributed moment. If any one of these connected members were free at its far end, its stiffness (measured by the moment necessary to produce unit rotation) would be only three-fourths as great as if it were fixed-ended. This would alter somewhat the distribution of the unbalanced moment among the connected members. Some of the members may be fixed, some may be free and some will be continuous at their ends, and the exact distribution of these unbalanced moments among them will depend upon this degree of fixation.

We may approximate the actual conditions by treating all beams which are not either free at one end or fixed at one end as half intermediate between the two conditions; to use a loose term we may treat them as "half free and half fixed." We should then decrease the stiffness of members simply supported at their far ends by 25% and the stiffness of intermediate members by 12½%, leaving the stiffness of the fixed-ended members unchanged. Or, what comes to about the same thing, we can increase the stiffness of members fixed at their far ends by one-third and that of interior members by one-sixth.

This adjustment seems logical and quite accurate. We can, however, go a step further and neglect entirely any adjustment of the values of I/L. This is equivalent to assuming all members at any joint to be partly fixed at their other ends. If they are completely fixed, they will be about 14% stiffer, and if actually free they will be about 14% less stiff. But in reinforced-concrete construction the relative values of EI are uncertain to a greater extent than 14%, and the fixed-end moments are themselves uncertain to the extent of 5 or 10%. The quest for precision greater than is given by this method seems to neglect essential physical elements in the problem.

This approximate method in which the unbalanced moments at the joints are distributed among the connecting members in the ratio of their I/L values irrespective of the stiffness of the far ends gives results within the limits of accuracy possible from the physical data — about 5% of the unbalanced moment at the joint. In many cases, after the fixed-end moments are computed, it is scarcely worth while to pick up a slide rule to get such facts as a designer needs.

In general the absolute error in the distributed moment in percentage of the unbalanced end moment will be less than one-fourth of the percentage error in relative stiffness. In Fig. 11 is shown the error in percentage of the unbalanced moment in the extreme case of one girder free and one fixed for various ratios of I/L of the two spans.

This fact, that a considerable error in the relative stiffness of the members makes so small a difference in the result, is one of the most interesting and important facts connected with moment distribution. If this were not true, moments due to continuity in concrete would, because of the large and erratic variations in E, be as indeterminable as some writers have alleged them to be.

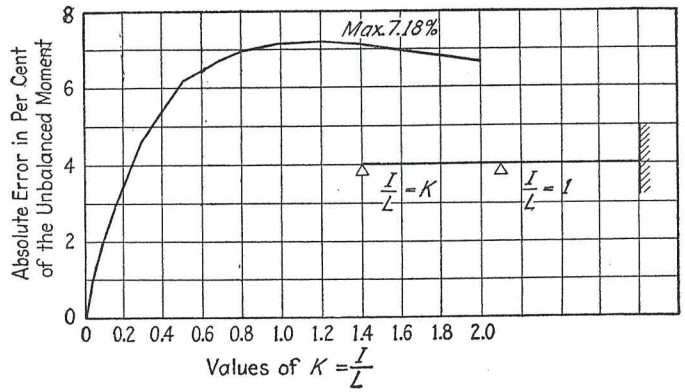

FIG. 11. Error from Approximate Moment Distribution.

Comparison of Exact and Approximate Values. In Fig. 12 are shown comparisons of exact and approximate solutions for seven typical cases. It will be noted that the errors are quite small. In general the relative error varies with the relative variations in span length and stiffness and with the relative intensity of the live load. Notice, further, that the proper basis of measurement of the relative error is the largest fixed-end moment at the joint. The result cannot be more accurate than is this moment; no mathematics, no series of tests, no models can possibly eliminate all uncertainty as to bending moments in reinforced-concrete construction. It should be noted that the error in end moments will appear in the center moment as a larger relative error.

The usefulness of this approximation is confined largely to distributing moments where only one span at a time is assumed to be loaded. Fig. 13 shows diagrammatically how the whole series of moments at all joints may be written at once for a given unbalanced moment at one joint, by using this approximation.

Suppose that we have an unbalanced moment M' at A as shown. This is distributed to the connecting girders in the ratio $K_c/(K_c + K_d + K_e)$

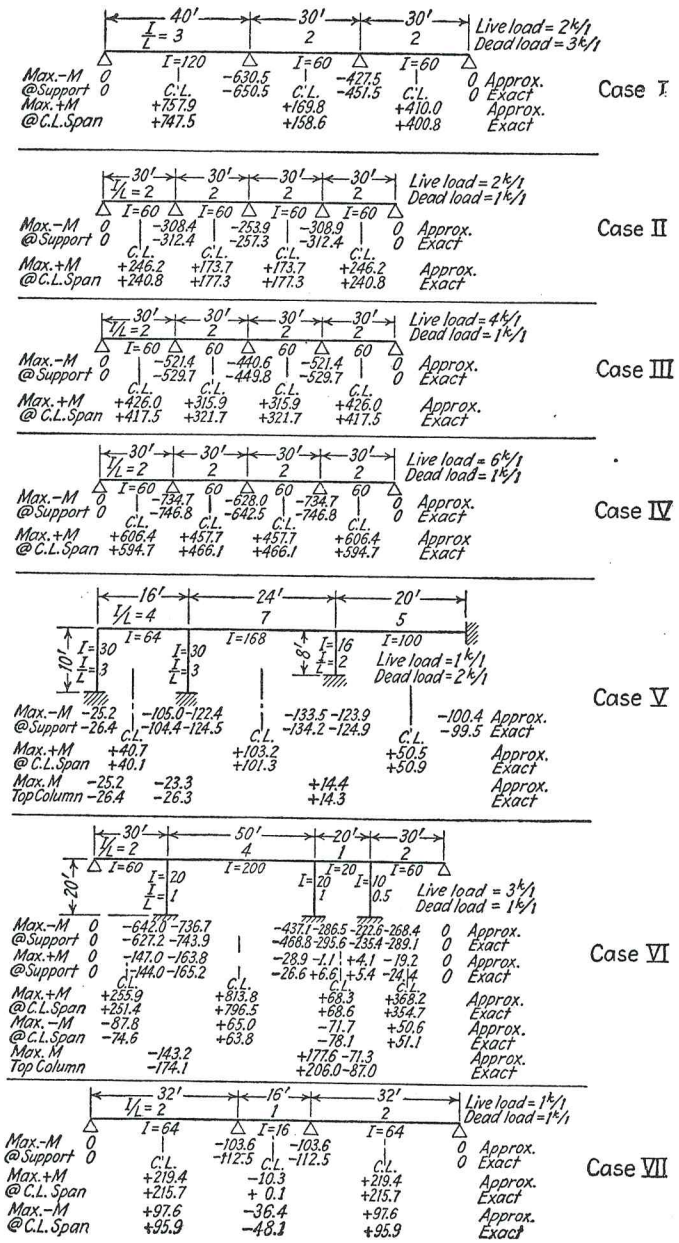

FIG. 12. Comparative Results — Approximate and Exact Moments.

and $K_e/(K_c + K_d + K_e)$, which is abbreviated in the figure to c/Σ_2 and e/Σ_2. Carrying these over to the other end of each girder, one-half with opposite sign, and distributing, we get in the right girder, for example:

$-\frac{1}{2}\left(M' \frac{e}{\Sigma_2}\right)$ $+\frac{1}{2}\left(M' \frac{e}{\Sigma_2}\right)\frac{e}{\Sigma_3}$	$-\frac{1}{2}\left(M' \frac{e}{\Sigma_2}\right)\frac{g}{\Sigma_3}$
$-\frac{1}{2}\left(M' \frac{e}{\Sigma_2}\right)\frac{(f+g)}{\Sigma_3}$	$-\frac{1}{2}\left(M' \frac{e}{\Sigma_2}\right)\frac{g}{\Sigma_3}$

By writing first the Σ values at each joint and adding the K values mentally we can write a whole series of distributions directly, using the upper scale of the slide rule.

If we were to compare approximate and exact values for an unbalanced moment at one joint we would conclude that the method was quite

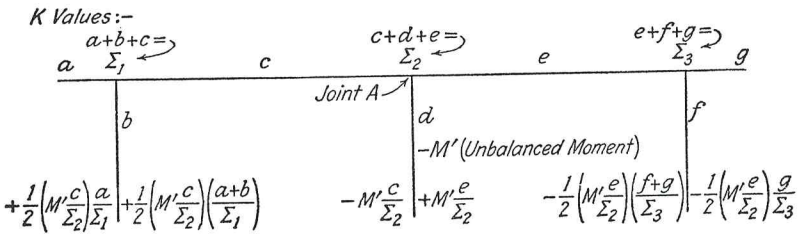

FIG. 13. Continuous Frame — Key Chart for Approximate Moment Distribution.

inaccurate. But it is to be used to get maxima where all spans are loaded with dead load. The errors are compensating to some extent, and the final results, as shown in Fig. 12 above, seem reasonably satisfactory.

D. Illustrative Problems

Distribution of Live Loads One Span at a Time by the Approximate Method. Maximum Moments. Figs. 14–16 show typical computations for curves of maximum moment in a simple case.

(1) Distribute moments for loads in one span at a time. We may use either the elementary procedure of moment distribution, carrying it to any desired precision, or we may use the approximate method, as in these computations.

(2) Draw the two curves of moments for live loads in alternate spans. In Fig. 14 we have drawn the curves for live load and dead load separately to show the shape of the curves. It is more convenient to draw the two combined curves for live and dead load on the same horizontal base line, thus getting at once those parts of the curves of maximum moments between the fixed points. This is done in the lower part of the figure.

(3) Compute the maximum negative moments at the supports by adding all negative moments due to live load to the moment due to dead load. Sometimes it may also be worth while to compute the maximum positive (minimum negative) moments at the supports.

(4) Connect the curves of maximum moments between the fixed points, already drawn, with the maxima at the supports. This completes the curves of maxima.

Illustrative Problem. Fig. 14. The total values of I/L at each joint are first written at the supports and the fixed-end live load moments computed as usual.

Distributing first for live load on the span at the left, as indicated by the loaded line, a moment of -76 is produced at B, $+23$ at C, and -1 at D. Distributing for live load on the second span, -51 is produced at B, -108 at C and $+7$ at D. Similarly for the third span, the moments are $+19$, -117 and -33, and for the fourth, -1, $+9$ and -44.

Find now by addition the moments at the supports for live load on all spans and from this, by proportion, the moments due to dead load. This assumes uniform distribution of dead load. (Fig. 18 shows a case where the dead load is not uniformly distributed.) Since the dead load and the live load were each taken as 1^k per foot the dead load moments follow by direct addition, the values at the supports being -109, -193 and -71.

From these figures the dead load moments and the maximum and minimum live load moments at the span centers, or elsewhere, may be got. The simple beam moment values at the center, $\frac{1}{8}WL = +113$, $+200$, $+312$ and $+50$, are written along the beam. The maximum positive live load moments in the first and third spans occur with these spans loaded simultaneously, and this same loading gives maximum negative live load moments at the centers of the alternate spans as indicated in diagram (*a*), Fig. 14. The moment at B for this case is $-76 + 19 = -57$, giving a net center moment of $+113 - 57/2 = +85$. Similarly the center moment in the second span is -75, in the third $+248$ and in the fourth -17.

The maximum positive live load moments in the second and fourth spans occur with these spans loaded simultaneously, and this loading

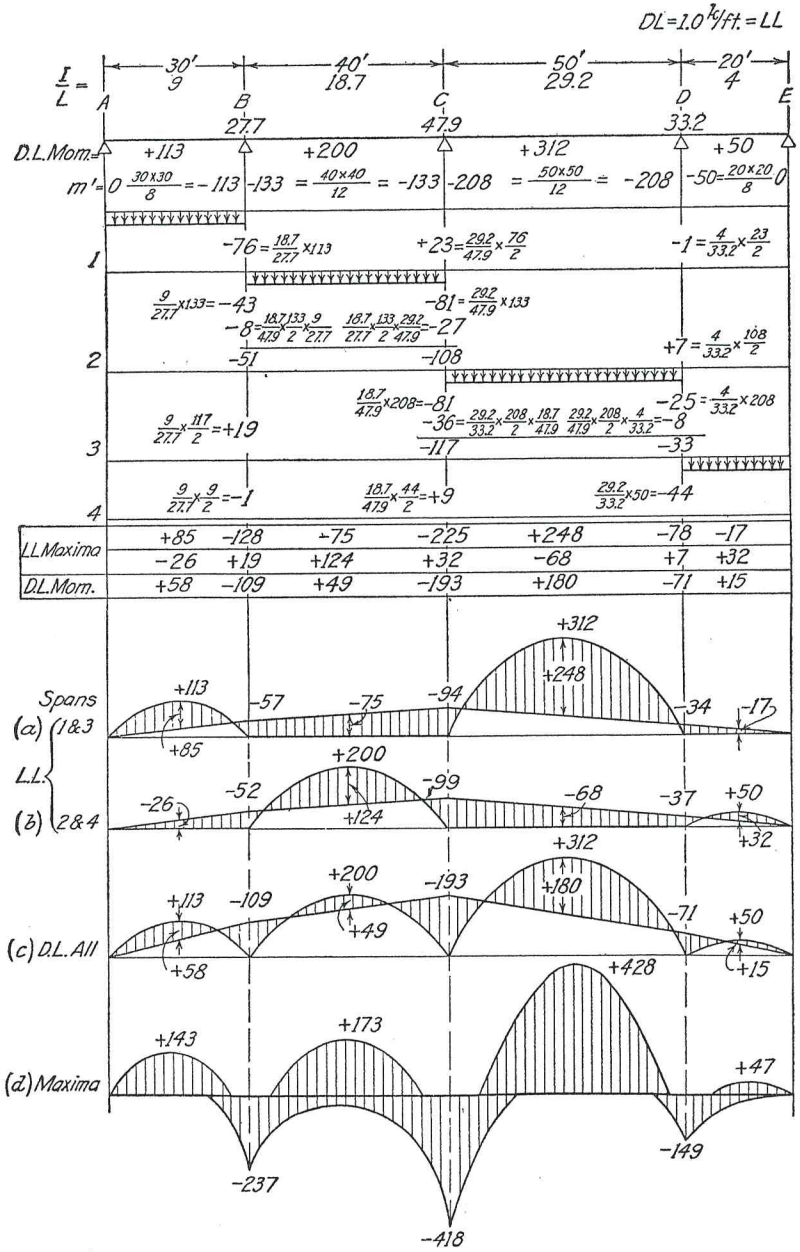

FIG. 14. Continuous Girder — Approximate Maximum Moments.

gives also maximum negative live load moments at the centers of the alternate spans as indicated in diagram (*b*). The moment at B for this case is $-51 - 1 = -52$, giving a center moment in the first span of -26. The center moment in the second span is $+124$, in the third -68 and in the fourth $+32$.

The dead load moments are plotted in (*c*) and the curve of total maxima at the bottom of the figure in (*d*).

Modified Arrangement. Fig. 15. By a slight change in arrangement the work may be made more compact. If the proper proportion of the end moment is first carried over to the far end of each beam, and added to the fixed-end moment there, the new total moment, m'', will need

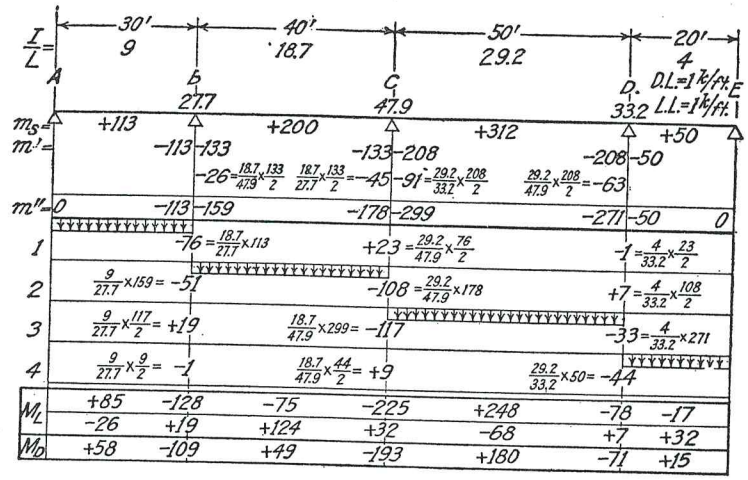

FIG. 15. Continuous Girder — Approximate Maximum Moments.

distribution only once to get the final moments at the supports. In the first and fourth spans this involves no change. In the second span a moment of -26 is first carried over to the left end and -45 to the right end, giving as moments to be distributed -159 at the left and -178 at the right. In the third span the total moments to be distributed are -299 at the left and -271 at the right. The final results are necessarily the same as in the previous illustration, Fig. 14, since identical operations are performed, though in a different order.

Illustrative Problem. Fig. 16. The data are the same as above except that the girder is continuous with columns. The end moments are distributed as before, one span at a time. The moment in the first span, -113, is resisted by the combined stiffness of BC and BF. The moment going to BA will then be in proportion to the total I/L value

of these two members and is equal to -82; the moment going to BC being in proportion to its own value of I/L is equal to -64. The moment -64 is then distributed to the remaining joints in the same way.

In the girders at the supports the maximum and minimum live load moments and the dead load moments follow as before by direct addition.

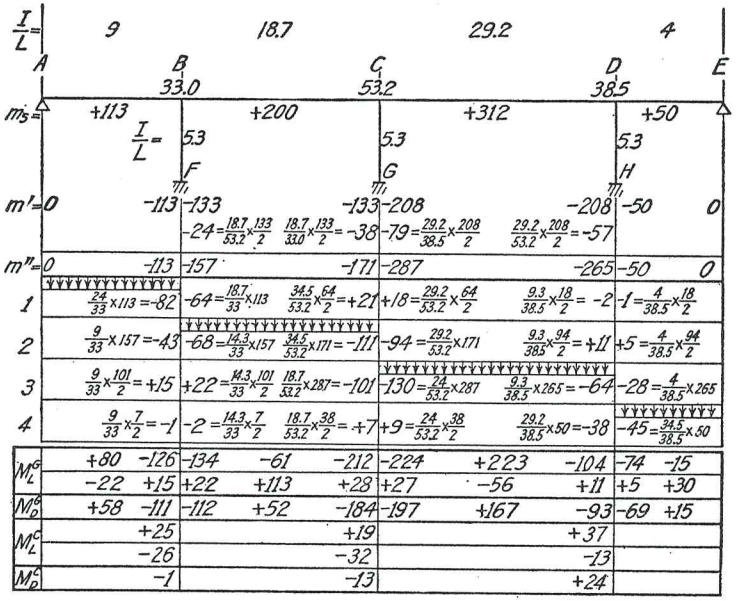

FIG. 16. Continuous Frame — Approximate Maximum Moments.

For spans 1 and 3 loaded the live load moments at the three interior supports are:

Span 1	2		3		4
-67	-42	-80	-112	-66	-29

from which the maximum positive live load moments at the centers of the first and third spans follow by subtraction as:

$$+113 - \frac{67}{2} = +80 \quad \text{and} \quad +312 - \frac{112 + 66}{2} = +223$$

and at the centers of the second and fourth spans the maximum negative live load moments are -61 and -15. The center live load maxima of opposite sign occur with the second and fourth spans loaded, and are -22, $+113$, -56 and $+30$. The center dead load moments follow from the live load values by addition.

The live load moments at the tops of the columns are obtained by subtraction from the girder moments, maximum positive and negative values occurring with live load in alternate spans.

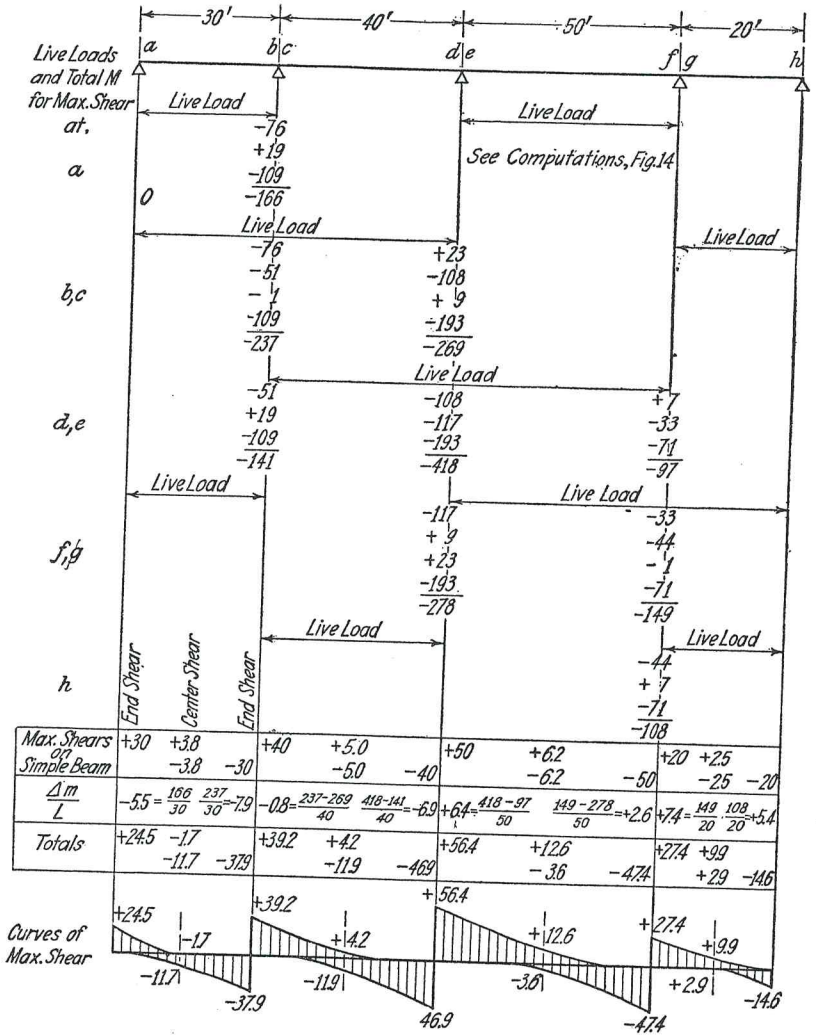

FIG. 17. Maximum Shears (Following Fig. 14).

Computations for Curves of Maximum Shears. Fig. 17. This problem follows the computations shown in Fig. 14, page 175. The positions of live loads are shown for maximum shear at ends. These are the same as for maximum moments at supports. The end moments for

live and dead load are also shown. Of course, neither of these would be shown in routine computations, the totals being written at once from the moments in Fig. 14.

Now write the shears at end, $W_T/2$, for simple beams, and also the maximum shears at centers, $W_L/8$, for live load to center on a simple beam.

Compute $\Delta M/L$, the change in moment (difference between end moments in any span) divided by the span, at each end of each beam, for the loading producing maximum end shear. Note that the shear is added arithmetically at ends of beams at which the negative moment is greater; at ends where the negative moment is smaller it is subtracted arithmetically.

Add the changes in shear due to continuity, $\Delta M/L$, to the shears on simple beams, to get maxima at ends and at center.

In the first span maximum shear at the left support occurs with live load on spans 1 and 3. The end moments for this loading are 0 on the left and -166 on the right. The shear due to this difference in end moments is $\Delta M/L = (0 - 166)/30 = 5.5$ and is subtracted from the simple beam shear. The total shear at the left is $+24.5$.

At the right end of the first span maximum shear is produced by loading spans 1, 2 and 4, as this is the loading causing maximum moment at the support. In this case $\Delta M/L = (0 - 237)/30 = 7.9$ and is added to the simple beam shear giving a total shear of -37.9.

The maximum positive (minimum negative) shear at the center is $+3.8 - 5.5 = -1.7$. The maximum negative shear at the center is $-3.8 - 7.9 = -11.7$.

Values in the other spans are obtained in similar manner.

Illustrative Examples. *Maximum Moments. Fig.* 18. This problem differs in principle from that shown in Fig. 14 only in that the dead load is not uniformly distributed. Consequently the dead load moments for each span must be got separately by proportion as indicated by the figures in parentheses.

The curves of maximum moments are here drawn directly. Those parts between fixed points are first got from loadings *a* and *c*. Maxima at the supports are then plotted and the curves completed, as previously explained.

Maximum Moments, Shears and Reactions. Fig. 19. This shows complete computations for maximum moments and for maximum end shears. The moment distribution is approximate, as in the examples above.

Note the figures in parentheses in the row of figures for maximum negative moments. These are moments for the loading giving maximum

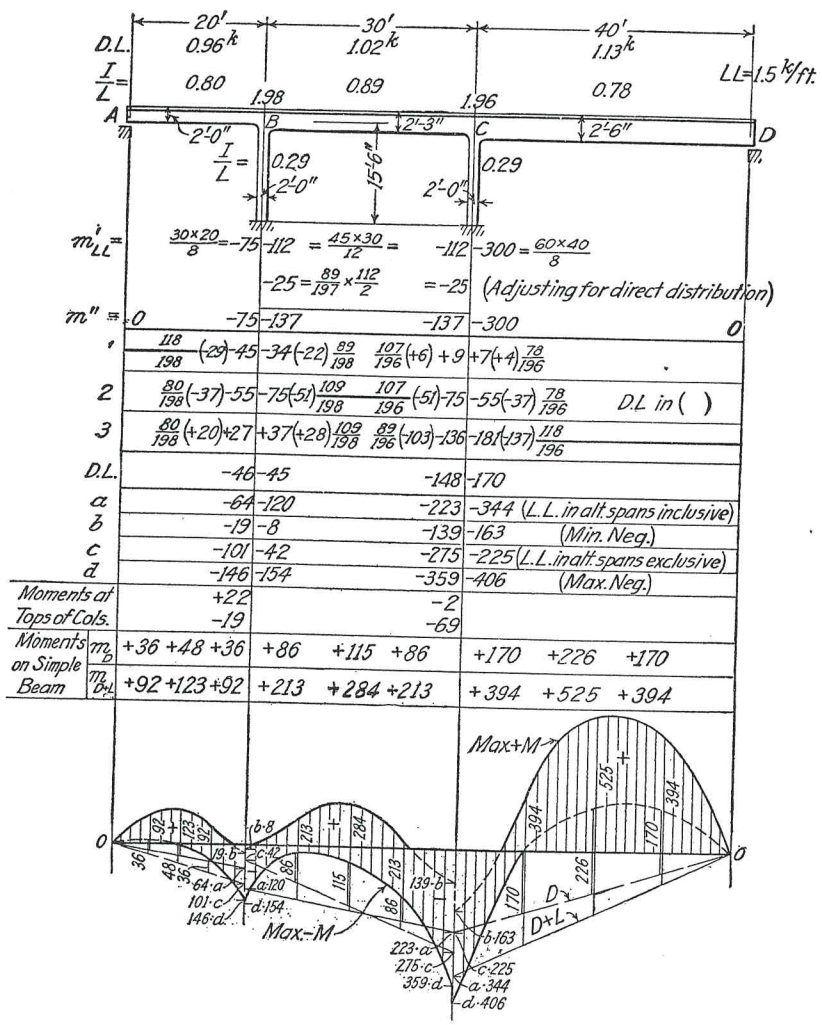

FIG. 18. Continuous Frame — Curve of Maximum Moments.

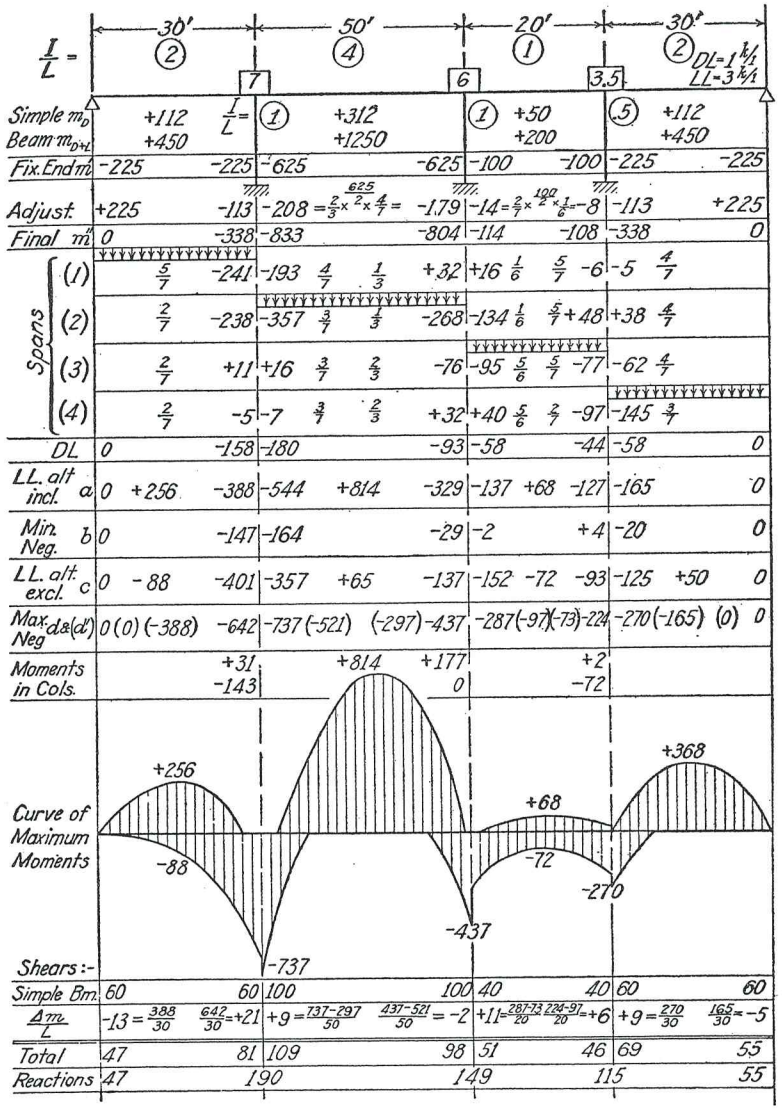

FIG. 19. Continuous Frame — Approximate Maximum Moments.

Dead Load 6" Slab = 72 #/□'

12" × 15" Beam, $\frac{180}{10}$ = 18

20 × 40 Gir. $\frac{800}{20}$ = 40

130 × 20 = 2.6 ⅔/'

Live Load 200 #/□' × 20 = 4.0

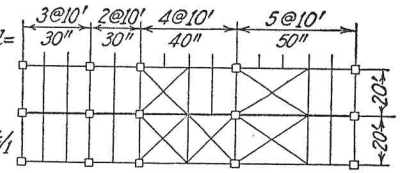

		30'			20'			40'				50'						
$\frac{I}{L}$ =		9			15.7			18.7				25						
			40			20				10								
Live Load =	20	40	40		40				10	20					20	40	20	
				24.7			34.4				43.7							
Simple Beam LL		400	400		200				200	200					480	440		
Simple Beam DL		260	260		130				130	130					312	286		
Total		660	660		330				330	330					792	726		
Fixed-End Moments		-267 = $\frac{10\times20}{30}\times40$ = -267			-100 = $\frac{40\times20}{8}$ = -100			-50 = $\frac{10\times40}{8}$ = -50				-96 = $\frac{2}{5}\times\left(20\times\frac{20\times30}{50}\right)\times\frac{3}{5}$ = -144						
								-38 = $\frac{1}{4}\times\frac{(30\times10\times20)}{40}\times\frac{3}{4}$ = -113				-64 = $\frac{1}{5}\times\left(40\times\frac{10\times40}{50}\right)\times\frac{4}{5}$ = -256					
m'		-267	-267		-100	-100		-88			-163	-160				-400		
Adjustment for Direct Distribution		+267			-133	-25 = $\frac{15.7}{34.4}\times\frac{100}{2}$		-36 = $\frac{18.7}{43.7}\times\frac{163}{2}$				-200				+400		
						$\frac{15.7}{24.7}\times\frac{100}{2}$ = -32			$\frac{18.7}{34.4}\times\frac{88}{2}$ = -24									
m''		0	-400		-125	-132		-124			-187	-360				0		
Moment Distribution Live Load 1					-252	+68					-20							
2					-44	-72					+20							
3					+12	-56					-108							
4					-8	+36					-152							
Full Live Load					-292	-24					-260							
Dead Load		× $\frac{260}{400}$ =			-190	-16					-169							
LL. in alt. Spans 1-3					-430	-4					-297							
Max. Pos.					-178	+88					-149							
LL. in alt. Spans 2-4					-242	-52					-301							
Max. Neg.	0	(0)	(-430)		-494	(-222)	(+16)	-144	(+32)		(-257)	-449	(-301)			(0)	0	
Shears: Max. Shears Simple Beam		+66	+13			+33		+16			+5	+26			+5			
			-13		-66		-33				-5	-33			-15		-73	
$\frac{\Delta m}{L}$		-14 = $\frac{430}{30}$	$\frac{494}{30}$ = -16		+26		+4	-3 = $\frac{144-257}{40}$	$\frac{449+32}{40}$ = -12			+9 = $\frac{449}{50}$			$\frac{301}{50}$ =		+6	
Totals		+52	—			+59		+13			+2	+35			+14			
			-29		-82		-29				-17	-45			-9		-67	
Reactions: From Shears		52			141			42				80					67	
Load at Sup.		33			66			33				16					33	
Total		85			207			75				96					100	
Simple Bm. for Comparison		99			165			82				75					106	

FIG. 20. Continuous Girder — Irregular Loading — Approximate Maxima.

negative moment at the opposite end of the beam. They are used in the shear computations to get ΔM.

Problem with Irregular Loading. Figs. 20–22. This problem differs from those that precede only in having the loads applied through floor beams. The loading is irregular owing to open panels in the floor as shown.

Fig. 20. As usual, the fixed-end moments are first computed. They have here been adjusted for direct distribution as explained above.

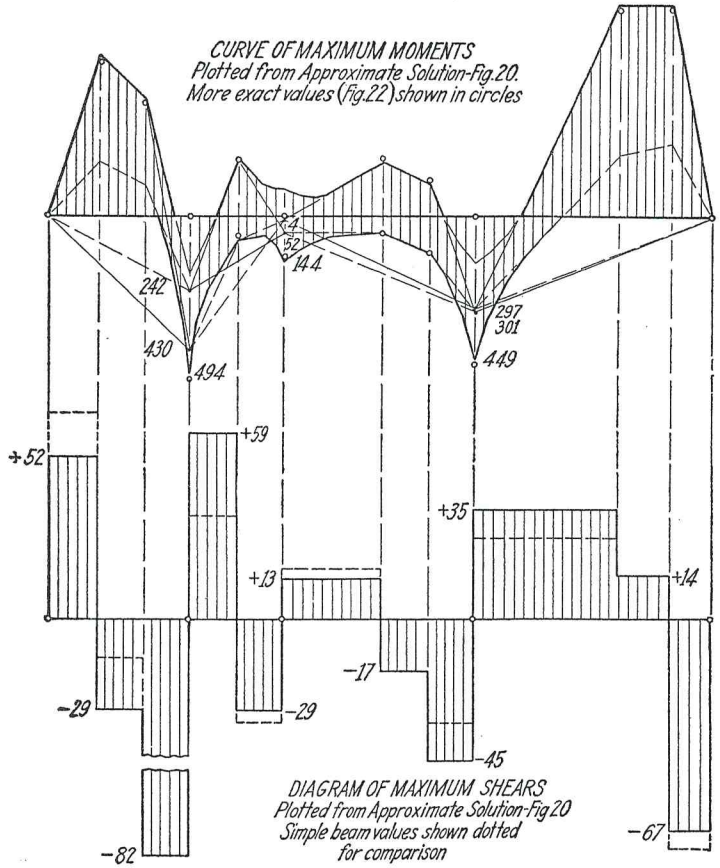

FIG. 21. Curves of Maximum Moments and Shears (See Fig. 20).

Moments are then distributed by the approximate method, one span at a time, and the totals found.

The maximum shears on the spans, considered as simply supported, are then computed. The shears due to continuity are computed from

the moments which exist for the loadings giving maximum moments at the supports. (The moment at the other end of each span existing simultaneously with the maximum end moment is shown in parentheses in the row of figures for maximum negative moments.)

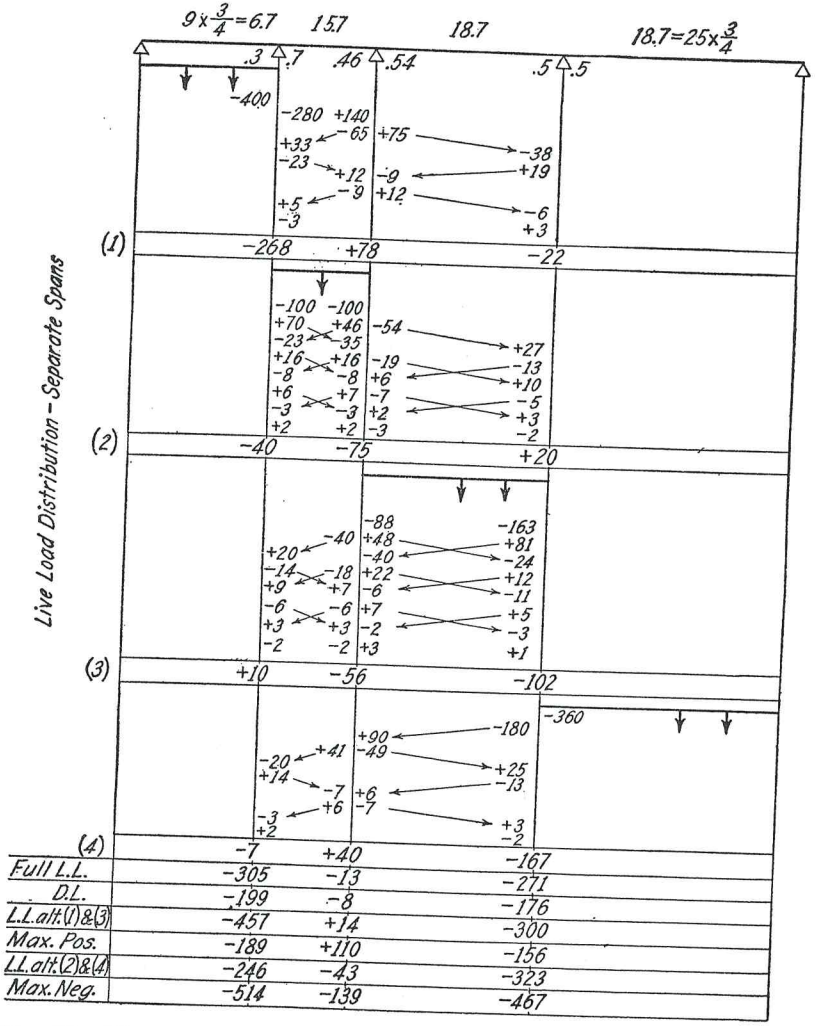

FIG. 22. Maximum Moments — Exact Moment Distribution. (See Fig. 20.)

Fig. 21. The curves of maximum moments for the two cases of live load in alternate spans (Fig. 20) are then plotted, the maximum moments at supports are plotted and the connecting curves (polygons) drawn

between the fixed points (assumed) and the supports. These polygons break at the fixed points and once between fixed point and support for each load point on the span.

The curves of maximum shear are also plotted.

Fig. 22. This problem (Fig. 20) is so irregular that it seemed of interest to make a more exact study of the maximum moments. More precise moment distributions were accordingly made and new totals determined. These are shown in Fig. 22. The revised values of the maximum moments are shown in circles on the curves of maxima (Fig. 21). It is quite apparent that the approximate method is sufficiently accurate here. Note, however, that exact moment distribution as shown in Fig. 22 involves little more work.

E. Curves of Maximum Moments for Standard Cases

The authors have not included curves of maximum moments for standard cases, partly because the usefulness of this text would seem to be in a discussion of fundamental principles and their application to the preparation of standards and to the analyses of problems occurring in irregular structures rather than to stock discussion of cases covered by code requirements.

Questions Arising in Preparation and Use of Standard Curves. For the preparation and application of such standard curves it is necessary that the specifications for their preparation be clear on two points:

(*a*) Where a beam frames into a column or into a girder, what shall be taken as the fixed-end moment on a section of the beam at the face of the column for load uniformly distributed over the span?

(*b*) Shall any allowance be made for torsion in connected girders due to rotation of the ends of the girders we are studying?

The second question is pretty definitely answered by codes at the present time; no such allowance is made. Eventually, however, such an allowance may be permitted in specifications when some data are available as to the torsional stiffness of concrete girders. The girders in torsion could then be treated just as connecting columns are treated in analyses. This question, then, affects the application of the curves rather than their preparation.

The first question has apparently been answered in two very different ways by different writers who have prepared curves or tables of maximum moments. In several cases they seem to have been quite unconscious that they were answering this question or of the implications of the answer given.

Suppose it is assumed that when no rotation of the end of the beam

(Fig. 23) takes place, the moment at the face of the column for full uniform loading is taken to be 1/12 × (load per foot) × (clear span)². We have then assumed that no deformation of the beam takes place beyond the face of the column. The curve of $1/(EI)$ for the beam, then, is as shown in diagram (*b*) of Fig. 23 instead of that shown in (*a*).

It should be evident that it is not correct to assume the curve of moments shown in (*b*) and at the same time the curve of $1/(EI)$ shown

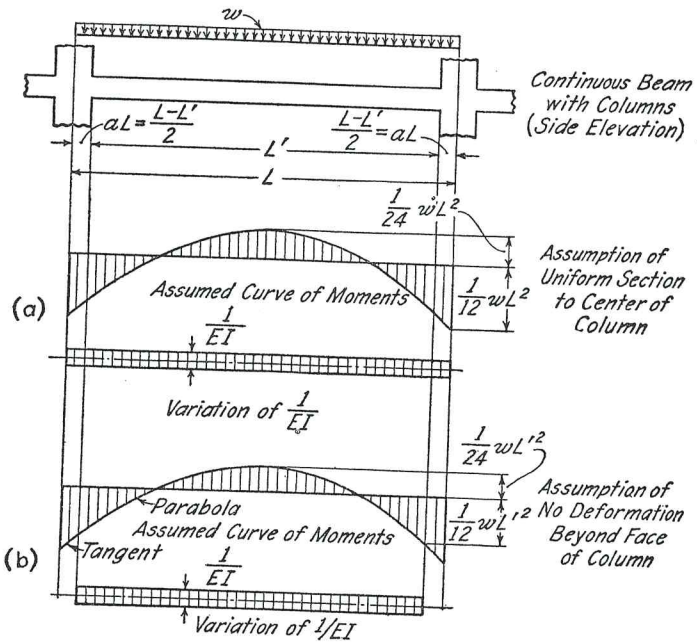

FIG. 23. Effect of Joints at Intersections on F.E.M.

in (*a*). Whether it makes any appreciable difference in the computed moments depends on circumstances. But it is not correct in any case.

Of course, it makes a difference in the computed moments whether we assume the moment curve shown in (*a*) or that shown in (*b*) for the fixed-end condition. The moments are quite different both at center and at support; the total moment, positive at center plus negative at face of column, however, is not changed.

Which of these two should we assume? The facts are probably nearer to the second condition; very likely there is not much flexure of the beam after it merges into the column, though there is some. Certainly most engineers would design for an end moment $1/12\,w$ (clear span)² at the face of the wall in the case of a beam fixed in heavy walls at both ends.

If we accept case (*b*), however, we are committed to the analysis of a frame containing beams of varying section. The fixed-end moments are as shown for uniform load and may be found for other conditions of loading, and the stiffness and carry-over factor can be found as explained in Chapter V. But the stiffness is no longer proportional to I/L for different beams, and the carry-over factor is no longer 1/2. These values become:

Fixed-end moments for uniform load $= 1/12\, wL^2[1 + 2a(1 - a)]$.
Stiffness varies as $I/L'\,[1 + 3(L/L')^2]$.
Carry-over factor (very nearly) $= 1/2\,[1 + 3a]$.

If $a = 1/10$ these values become:

Fixed-end moments $= (1.84/12)wL'^2$.
Stiffness 1.78 times as great as that of a beam exactly similar except that it is assumed to have uniform section for its full length L.
Carry-over factor = 0.65 (a more exact value is 0.648)

If we base our curves on the assumption of no deformation within the joint, which is probably more nearly correct than that of full deformation, we encounter difficulties in preparing usable curves because in addition to the usual variables we have the varying ratio of clear span to total span.

Several sets of curves and tables of maximum moments are in print and others have been compiled for private use. Most of these are based on the assumption of full deformation within the joint. Usually these give maximum negative moments at the intersection of the members, and these need to be corrected (by subtracting the end shear times half the width of the support) to the face of the support for use in design.

Some of these curves and tables seem to be entirely wrong; any discriminating engineer will satisfy himself fully as to the method used in their computation before using them. Any set of such curves which purports to give coefficients for moment computed on the clear span without reference to the ratio of clear span to span on centers is necessarily based on assumptions which need careful scrutiny.

Some Blunders in Analyzing Continuous Beams. A reader careless of his statics might suppose that, in analyzing either of these cases, it would be necessary to take account only of the fixed-end moment at the face of the column and that the unbalanced sum of such moments at any joint should be distributed among the connecting members. This neglects entirely the effect of the unbalanced shears at the face of the column. Thus suppose we have beams connecting to each side of a column and loaded as shown in Fig. 24 (*a*). If we adopt the theory that

no deformation takes place in the beam after it joins the column, then if we assume that there is no rotation of the joint, we find moments -100 at both faces of the column together with shears as shown in (*b*).

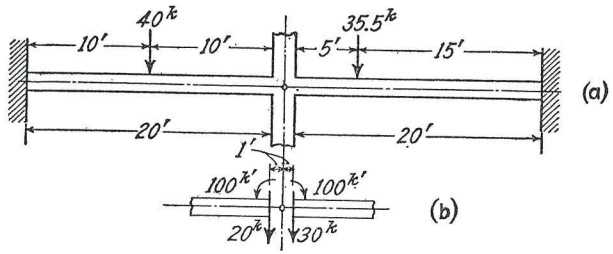

FIG. 24. Error from Balancing Moments at Faces of Supports.

It is evident that the joint is not balanced; moments would be produced in the columns by this condition. It is the bending moments for the fixed-end condition computed at the intersection of the axes of the members which must be balanced, because the shears are then taken through the same point and so are eliminated from the problem.

Another blunder, but less serious in its results, is possible if we accept the theory that no deformation takes place in the beam after it joins the

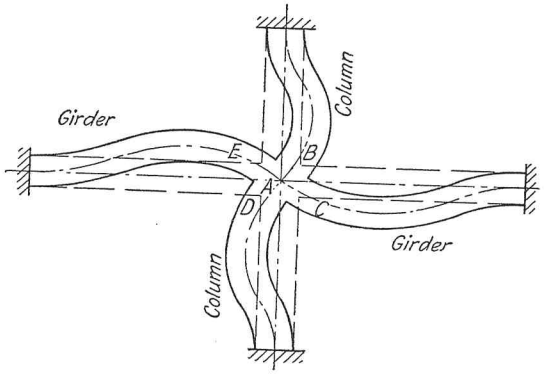

FIG. 25. Showing Why Stiffness Must Be Referred to Center of Support.

column or in the column after it joins the beam. We cannot now take the stiffness of these members as proportional either to $\frac{\text{moment of inertia}}{\text{clear length}}$ or to $\frac{\text{moment of inertia}}{\text{length on centers}}$ nor can we take the carry-over factor as 1/2.

Rotation of the whole joint occurs and must take place about some

one point. This point is the intersection of the axes of the connecting members. The deformation of the members due to this rotation is as shown in Fig. 25. It will be noted that sections through the intersection of center lines are rotated, but sections *BC*, *CD*, *DE*, *EB* are displaced linearly as well as rotated.

Fig. 26 shows a comparison of curves obtained in one case by three methods discussed above: (*a*) assuming no deformation within the joint and carrying this assumption throughout; (*b*) assuming the beam to be of constant section to the center of the girder and carrying this assumption throughout; (*c*) neglecting the rotational effect of the shears at the faces

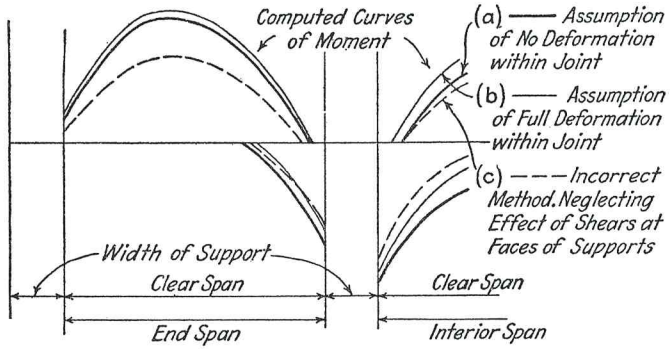

FIG. 26. Comparative Curves of Maximum Moments.

of the girders. The case selected is somewhat extreme — live load twice dead load — but not unusual. The diagram brings out especially the deficiency of steel given by curve (*c*).

Limitations on Finding Exact Maxima in Building Frames. Any attempt to determine exactly the maximum moments and shears in building frames encounters difficulties both from lack of knowledge and from lack of time.

We should note the uncertainties which result from

(1) Variation of what we call I along the length of the girders, producing uncertainty in the fixed-end moments, in the relative stiffness and in the carry-over factors. The uncertainty is not as great as some seem to think but it must not be overlooked.

(2) Uncertainty as to the relative moment of inertia of columns and T-beams.

(3) Uncertainty as to the torsional restraint produced by members connecting at the columns.

It is proposed here to call attention to certain other elements in the

problem. To bring out these elements we have chosen a rather extreme but not impossible case.

It is desired to find maximum end shear and end moment in girder A, Fig. 27, adjacent to the corner panel of a building To simplify the problem we will assume that both slabs and beams are simply supported along walls AA and are rigidly fixed along lines BB.

For the present neglect the stiffness of the column and neglect all torsional effects. To get maximum shear and moment at the inner end of girder A we load all four panels. The usual conventional analysis is for equal panel loads of 26.6^k.

This assumes that the reactions of the slabs on the beams and of the beams on the girder are the same as if they were simply supported.

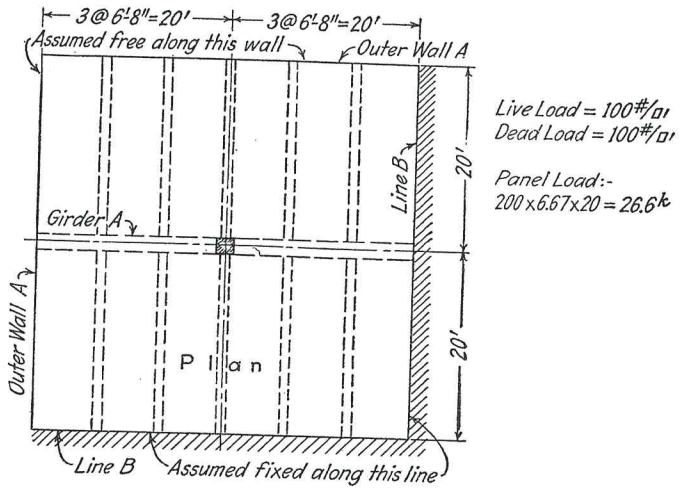

FIG. 27. Corner Panel in Building.

Because of continuity this is not correct. The outer slab is free at the wall but is continuous over the first inner beam. The reaction from this slab on the first inner beam, then, is increased about 20% and the load on the beam is increased about 10%.

In the same way the reactions from the other beams are increased about 10%.

The reactions on girder A then, instead of being as shown in Fig. 28 (a), are more nearly as shown in (b).

But even this analysis is not correct because the flexure of the girder is undoubtedly considerably restrained by the torsional resistance of the connecting beams. This also affects the fixed-end moments, the stiffness and the carry-over factor. If we know the torsional stiffness of the

connecting beams, we can include it in our analysis; it is not worth while to go into the method here.

This torsion of intermediate floor beams tends to reduce the moments in the girder. Of course, if the other end of the floor beam connects to a girder which is bent as is the girder in question, there is no torsion.

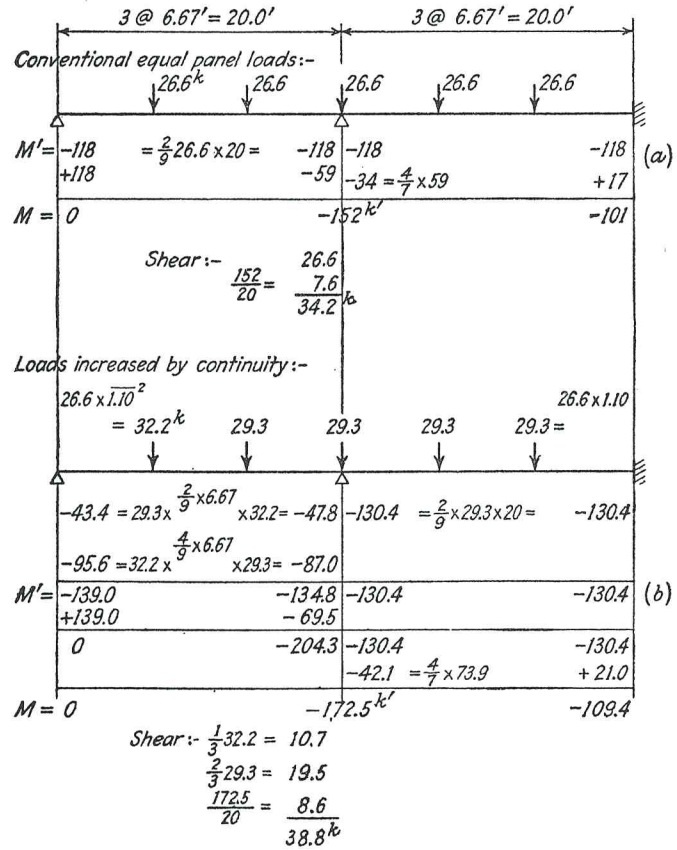

FIG. 28. Comparison of Computed Shears in Corner Panel. (See Fig. 27.)

Where, then, the moments are increased by continuity they are somewhat decreased by torsion; where there is no torsion, there is not much increase in load. Torsion, however, does not reduce very much the maximum shears.

This whole subject is a research problem. The same elements enter into the analysis of slab and beam construction as into analysis of flat slabs, though their relative importance is different. The only purpose

of this discussion is to discourage a too naïve attitude toward the analysis of slab and beam construction. Our analyses must necessarily be somewhat conventional; the answers are not exact.

F. Further Short Cuts for Preliminary Design

Effect of Distant Spans. We can further shorten the work of drawing curves of maxima if we can estimate closely enough the effect of loads in spans not adjacent to the supports. If we can do this the number of moment distributions required is reduced to two. Thus in Fig. 29 if we load spans (1) and (3) (alternate spans) and then spans (2) and (4), we can get the effect of loads over all spans by addition of these two cases. If now we can estimate quickly the effect at support A of removing the load from span (3), we can find maxima at support A. If we can estimate the effect at support B of removing the load from spans (1) and (4), we can find maxima at support B. The effect of loads in spans further removed than this may, except in the most unusual cases, be neglected. The shears and moments produced by live load in these spans, the next spans but one from any support, may be closely estimated with a little experience. In general they will amount to about one-tenth of the live load maximum and hence less than one-tenth of the total. They do not, then, need to be estimated with great accuracy. No attempt has been made, however, to show just how to estimate these corrections. If one is quite familiar with analyses for single-span loading, he can do it quite readily; otherwise he would better avoid trying to do it. In fact, one who is experienced in distribution of moments can write the values for curves of maximum moments almost by inspection with enough accuracy for preliminary design.

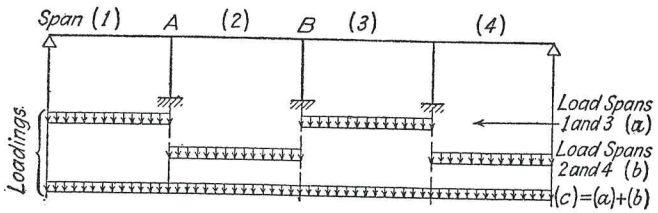

FIG. 29. Approximate Loadings for Maxima.

Symmetrical Frames. If the structure is symmetrical, this procedure is considerably abbreviated. If the number of spans is odd, the center span is always symmetrically loaded and we may conveniently use the end rotation constant. If the number of spans is even, there is only one condition of loading to be investigated, the two cases of loading in which we load alternate spans being of opposite hands.

Fig. 30 shows the determination of end moments for a three-span symmetrical case. In this case we should add about 10% of 100 on the right and 5% on the left of the first interior support to the maxima found for full loading to allow for the removal of live load from the distant end span.

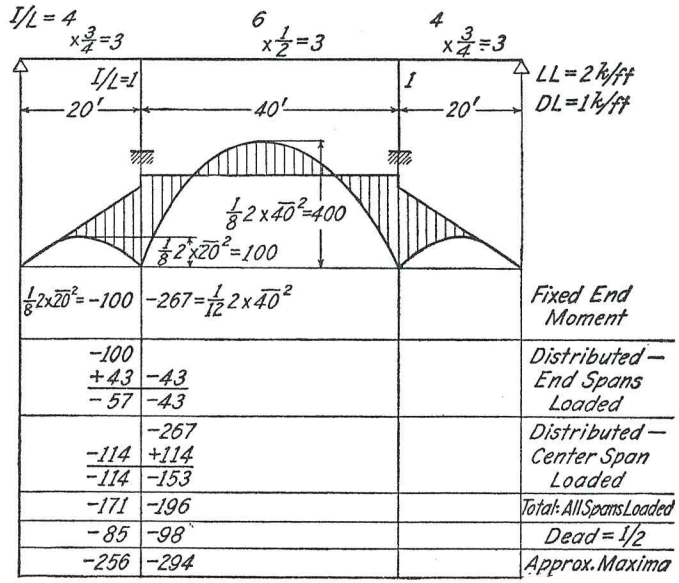

FIG. 30. Symmetrical Frame — Approximate Maximum Moments Using $1/C$.

Approximate Maxima by Graphics. Fig. 31 shows how the distribution may be made graphically, in (a) for full loading, in (b) for loading of the end spans. In (c) the two diagrams have been combined. This leads directly to Fig. 32, in which all maxima are found directly on one diagram of moments, some allowance being made for positive moment at supports due to loads on far spans.

From the curves of moments thus determined, the curves of maximum live load moments may be drawn directly and by superimposing the curve of dead load moments (got by proportion from the curve of moments for full live loading and drawn upside down so as to be automatically added) we get the curve of maximum moments.

The curves of shears have also been drawn. If we know the point of zero shear, which is halfway between the points of inflection for any given condition of loading, we can draw the curve of shears through this point

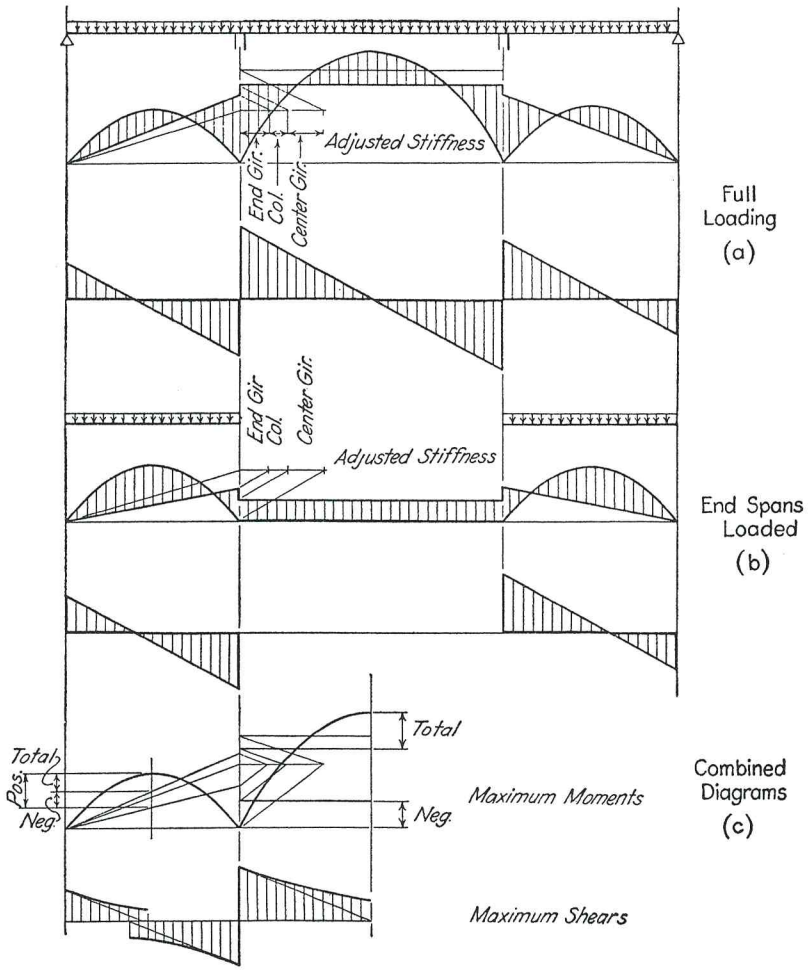

FIG. 31. Suggested Graphical Construction for Maxima.

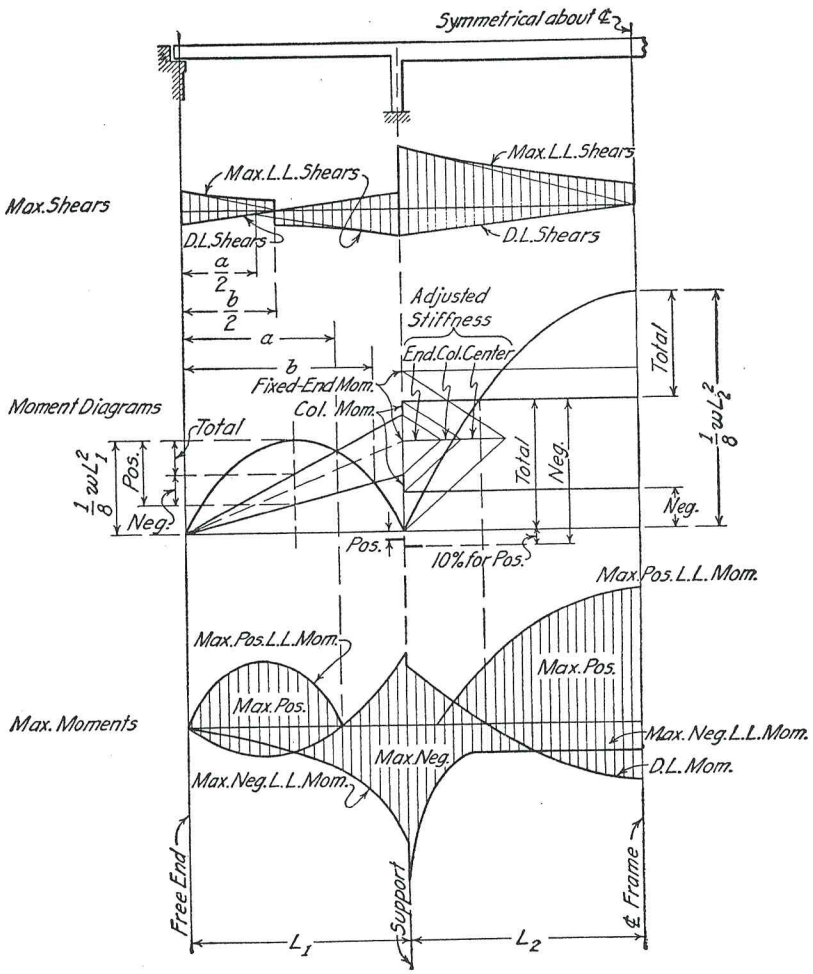

FIG. 32. Suggested Graphical Construction for Maxima.

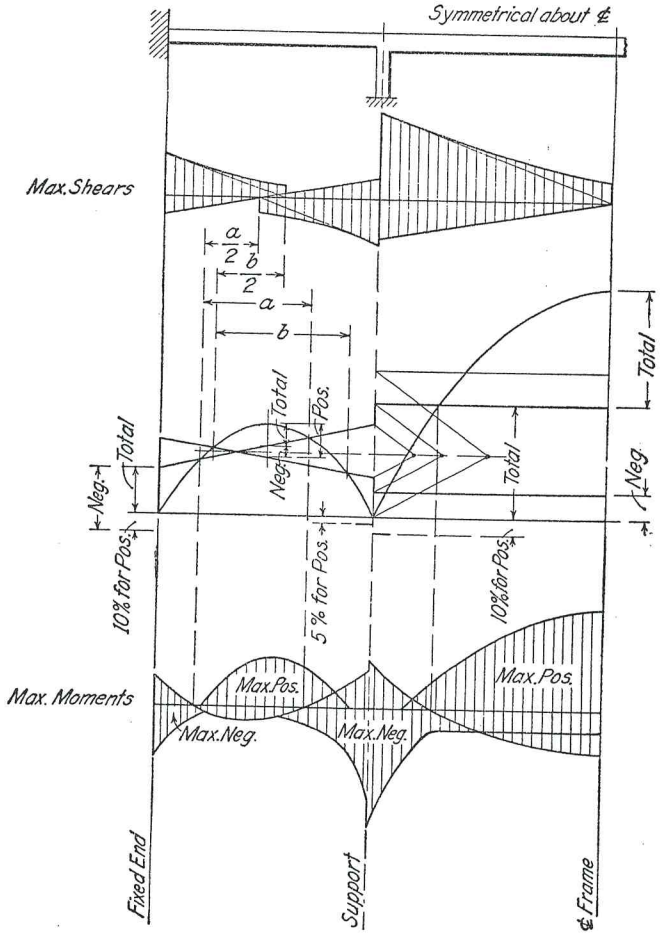

FIG. 33. Suggested Graphical Construction for Maxima.

on the proper slope. In this case no correction has been made in the shears at the first interior support for live loads in the far span.

In Fig. 33 a similar construction is shown for the case in which the ends of the girders are fixed.

These diagrams are intended merely as suggestions.

CHAPTER VII

RIGID FRAMES

A. Types and Uses

Definition of Terms. The term "rigid frame" has been used in different senses by different writers. It may be taken to apply to all frames having rigid connections at the joints and would then include buildings, bents and viaduct structures. By some it has been restricted to those structures which are made continuous with the object of improving the design, as has been done in arched bents used for industrial buildings, for hangars and similar structures and also in rigid viaduct frames at highway over-crossings having limited clearance.

A bent may be defined as a structure consisting of columns supporting a transverse girder. If the girders are curved the bent is referred to as an arched bent. A rigid frame is a bent or series of bents depending for its stability on continuity at the joints.

In some structures continuity of columns with girders is a distinct disadvantage to the designer because it complicates the design without saving material and is justified only by its convenience to the constructor; in others, continuity is definitely depended upon to produce economy of materials. The effect of continuity on the stresses is in the one case similar in some ways to what is referred to as secondary stress in steel construction; in the other the moments produced by continuity are themselves primary. In one instance we do not depend on continuity to support the load; in the other, we depend on it definitely.

The term "frame" here is used in a rather indefinite sense. Practically all structures of reinforced concrete except single-span arches are rigid frames. The chapter discusses certain questions not discussed elsewhere in the book and brings together certain methods and views which are elsewhere presented separately.

There seems to exist a popular idea that bents with curved members may be classified as arches and that some mysterious source of economy attaches to arched construction. If the thrust of the arch can be provided for without additional cost in the foundations and if the arch can be formed to the pressure line of the prevailing load system, the arch may prove quite economical. In framed bents neither of these conditions is readily satisfied.

In general, little if any economy is to be expected from this form of construction, though some economy is possible under existing specifications. If increased stresses are permitted in columns subjected to combined thrust and flexure, it may evidently be cheaper to decrease the bending moments in the girders at the expense of increased moments in the columns.

In other cases economy may result from the fact that some sort of framework fits the load conditions. Thus, in the case of the frame bridges which have been used in Europe and more recently in America, economy is claimed as a result of making the abutment a beam supported at two points rather than an ordinary gravity abutment. Most of the economy realized in this type of construction, however, results from reduction in height made possible by reduction of the depth of girder at mid-span with consequent decrease of yardage in the approaches, and from savings in constructing the foundations.

Sometimes the rigid frame can be made more attractive in appearance than simple post and girder construction. This is its chief merit. The same result may be obtained by a structure of the same shape made statically determinate with hinges, but hinges are not generally desirable in structures of reinforced concrete.

Types of Rigid Frames. In Fig. 1 are suggested some types of construction which may be called rigid frames.

Loadings of Rigid Frames. Rigid frame buildings are subject to:

(*a*) Dead load, which is usually symmetrical.
(*b*) Live load on floors.
(*c*) Snow load on roofs, which is usually symmetrical. Critical stresses for snow load may sometimes, however, result from conditions of unsymmetrical loading.
(*d*) Wind loads.
(*e*) Stresses resulting from temperature changes and from shrinkage.

Rigid frame bridges are subject to:

(*a*) Dead load from the structure itself and its roadway.
(*b*) Live load considered as a moving uniform load or as a series of moving concentrated loads.
(*c*) Earth pressure against the abutments.
(*d*) Stresses resulting from temperature changes and from shrinkage.
(*e*) Traction, centrifugal force, wind.

In general, then, we have the problems of fixed vertical loads, of moving vertical loads and of horizontal loads. The three need slightly different treatment. Moreover, the relative importance of these three sources of stress and the degree of precision justified in their solution

vary with the type of structure. The problem of moving vertical loads is not treated here (see Chapter VI), the chapter being devoted almost entirely to single-story buildings or to wind stresses in buildings having more than one story.

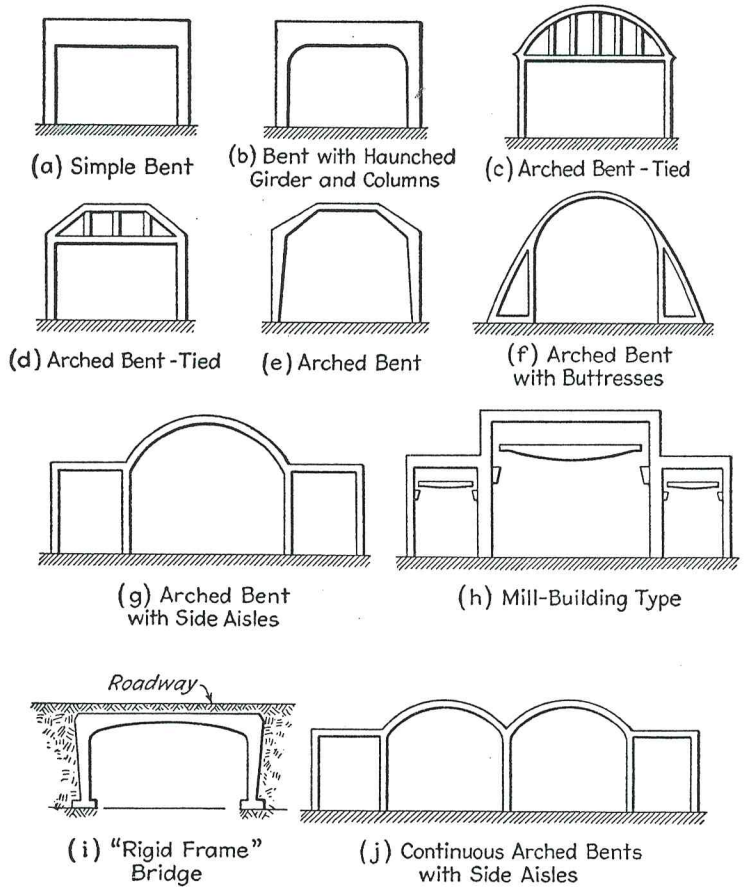

FIG. 1. Types of Rigid Frames.

Methods of Analysis of Rigid Frames. Rigid frames may become relatively complicated structures, and considerable ingenuity is often needed for their exact analysis.

They may be, with some convenience, classified as follows:

(*a*) Frames of one story with one or more aisles and with straight members. Such structures may be either bents or viaducts. For vertical loads they are readily analyzed by moment distribution. If sidesway

is indicated and it can occur, we may easily correct for it; it is rarely important from the viewpoint of design for vertical loads. For horizontal loads resulting from wind or traction we may use moment distribution, but it will be found that simple shear distribution (distribution of the horizontal force to the columns) is sufficiently accurate.

(*b*) Multi-story frames of one or more aisles with straight and continuous members. These are usually buildings, though viaducts sometimes have two decks. For vertical loads they are analyzed by moment distribution. The problem connected with their design which is discussed in this chapter is that of wind stresses.

(*c*) Multi-story frames of more than one aisle with straight members, some of which are not continuous across the structure. These are commonly mill-buildings with side aisles. This type of construction also occurs in multi-story buildings having mezzanine floors.

(*d*) Frames of one story and one aisle with curved members. These are commonly industrial buildings with arched roofs but without tie rods. After they have been designed, they may be analyzed by the column analogy. Certain viewpoints are indicated that may guide in their design.

(*e*) Frames of one story and of more than one aisle with curved members. Series of continuous arched roofs or other arches on high and slender supports. The problem of continuous arches is discussed in Chapter IX.

Methods of Design. Here, as elsewhere, it is important to distinguish methods of design from methods of exact analysis. Methods of design tell us what general shape and proportions to give to the structure; methods of exact analysis are in general to be applied only after the design is made.

Methods of design must be simple and convenient in order to be useful. In the case of structures which are as complicated in their action and as various in their forms as are continuous frames, it is not possible to lay down perfectly general rules.

The methods of design discussed here are:

(*a*) The method of moment distribution for cases in which the joints do not move.

(*b*) The pressure line conception for visualizing quickly the probable curve of moments in a single bent.

(*c*) The distribution of shears in allowing for horizontal forces.

(*d*) The use of the conception of false ties and struts in certain cases.

For exact analyses we may use moment distribution, shear distribution, the column analogy and combinations of these methods.

B. Single-story Bents of One Aisle

Bents one story high with a width of one aisle may be:

(*a*) Bents supporting the girders in viaducts.

(*b*) Rectangular frames for industrial buildings — the mill-building type without side aisles — frequently carrying cranes.

(*c*) Frames with arched roofs such as are sometimes used for garages or for factory buildings having some architectural pretensions.

In these structures, if of ordinary proportions, the stresses due to wind and to change of temperature are rarely serious; the frames are designed for gravity loads. Elaborate analyses of such structures may, and usually do, become very academic. They serve excellently, however, as illustrations of method, and several of the examples which follow are included for that reason only.

The isolated one-story bent offers an opportunity not only to illustrate methods of analysis — moment distribution, moment distribution with correction for sidesway, the column analogy, the use of pressure lines — but also to show many errors that may creep into such analyses or into their interpretation. The following questions arise:

(*a*) If sidesway is indicated, can it occur? Is it free? Does this affect the design?

(*b*) Have we made proper allowance for the stiffening of the members within the joint? It may be dangerous to analyze the structure as a line diagram.*

(*c*) In the column the significant moment is at the bottom of the girder. Several important questions then arise as to allowable stresses at this section:

(*d*) What will be the effect of any probable foundation distortions?

(*e*) Are the stresses in the columns to be looked on as primary stresses depended on to carry loads, or as secondary stresses? Should we distinguish these in choosing allowable stresses?

(*f*) What load combinations are probable?

Some of these questions are discussed here. They constantly recur in continuous frames and need much consideration.

Theory of the Static Arch as Applied to Single Bents. The quickest way to form an idea of the curve of moments in an arched bent is by using the pressure-line theorem. From this theorem we know that, if the arch is of uniform section, the true line of pressure is that string

* The question is sometimes asked whether a bent should be analyzed using the free length or the full length in computing I/L of the members. The answer is that neither is correct, though either may be approximately correct.

polygon for the loads which lies nearest to the arch axis.* In the case of an arched bent this pressure line cannot be sketched by eye as easily as in a true arch of which the shape more nearly fits the loads. Nevertheless the conception is very valuable.

In the bent shown in Fig. 2 the pressure line would be as shown in (*a*) if the bent had the hinges shown. If there are no hinges, there will

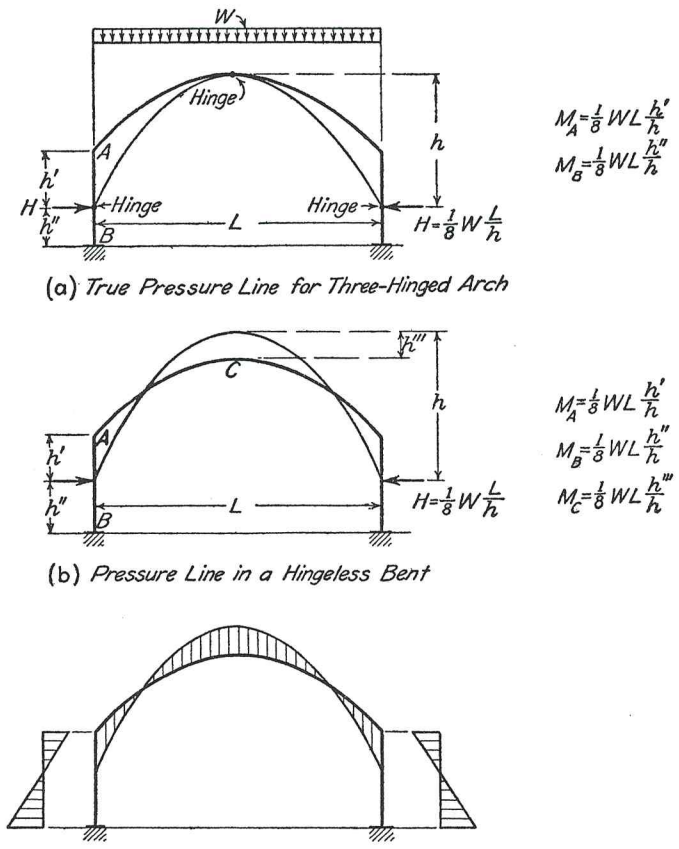

FIG. 2. Pressure Lines in Bents.

be moment at the crown and the pressure line will be more nearly as shown in (*b*).

If the bent were of uniform moment of inertia we could form a very

* This is not an exact statement of the pressure-line theorem, nor is it exactly true, but it will serve our purpose here. See the discussion of this theorem in Chapter IX.

fair idea of the position of this line of pressure by sketching so that the moment areas balance. But the section will not be uniform and the position of the pressure line is sensitive to large changes in I, which means that it is sensitive to relatively small changes in the depth. The pressure line moves towards a section of small depth (small I) and away from a section of large depth.

If the foundation is not absolutely immovable — and every foundation bed is subject to some distortion from load — the pressure line moves towards the base of the column.

The analysis of the structure, then, involves two sources of uncertainty:

(*a*) We do not know accurately the relative moments of inertia of the column and of the girder, especially if the latter is of T-section.

(*b*) We do not know the stiffness (elastic properties) which should be assigned to the foundation.

We can vary the curve of moments in this structure by varying the shape and proportions of the structure, and there will always be some

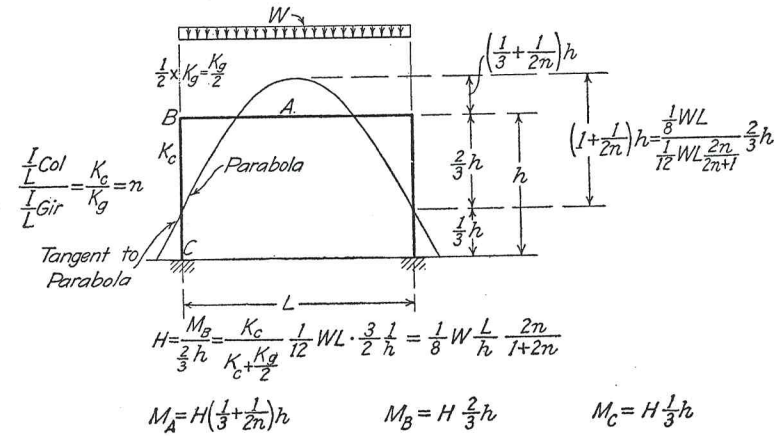

FIG. 3. Pressure Line in a Bent.

uncertainty as to the exact curve of moments for the reasons stated above. This latter fact need not be very serious if it seems worth while to draw, by use of the column analogy, several curves of moment based on different assumptions as to the elastic properties, but this will not usually be done unless the structure is quite important. In any case some added material will be required by this uncertainty.

Fig. 3 shows the pressure line for a rectangular bent. In this case the bent has been treated as a line diagram, which is not exact. For further discussion of the moments in bents see Chapters II and III.

Pressure Line Due to Wind in an Arched Bent. On page 214 is given an approximate method for analysis of moments due to wind in a rectangular bent. From such an analysis it is easy to draw the pressure line for a given case, as shown in Fig. 4.

It will be seen that this pressure line is like a bag fastened to the ground and held by a strut against the wind, the ends of the bag being

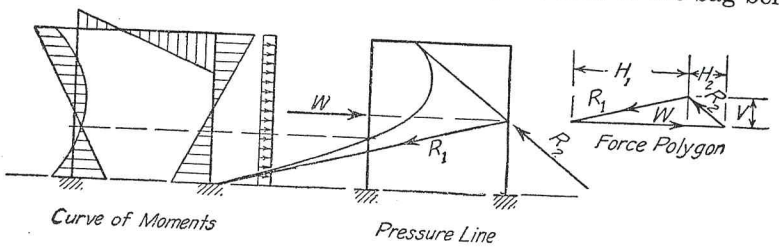

FIG. 4. Wind Pressure on Rectangular Bent.

tangent to the reactions. From this picture a rough sketch may be made of the pressure line for an arched bent. In Fig. 5 the moments are conveniently found as $M = Vx$, where V is the vertical component

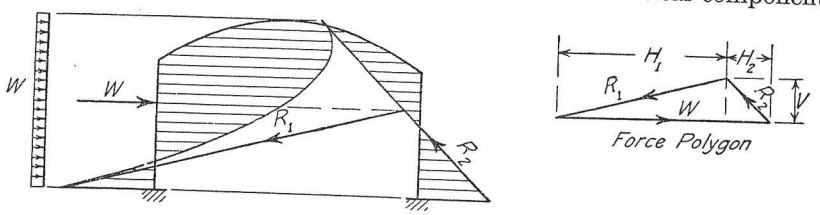

FIG. 5. Wind Pressure on Arched Bent.

of the reactions and x is measured horizontally from the structure to the right reaction on the right of the crown and to the curved pressure line on the left of the crown. Vertical components of the wind pressure have been neglected.

It is true that this pressure line cannot be sketched accurately by eye, since its position depends on the shape and proportions of the structure, but by roughly sketching it we may form some impression of what values are important and whether they are worth accurate computation.

Analysis of Single Bents by the Column Analogy. Single bents may be analyzed by use of the column analogy as explained in Chapter III. Usually the best thing to do is to use the column analogy to draw the pressure line, since this gives at once a picture of the curve of moments and of the action of the structure in resisting the load.

For convenience a brief recapitulation of the column analogy is given here:

(1) Draw any convenient curve of moments statically determined for the given loads.

(2) Consider these moments as intensities of pressure on a column section having the same dimensions as the elevation of the bent except that the width is proportional everywhere to a small quantity $1/(EI)$. This is the analogous column section.

(3) Locate the neutral axis of this section for the loads just determined. This is the line of action of the reaction which is needed to maintain continuity. The magnitude of this reaction is the fiber stress at unit distance from the neutral axis.

(4) If the bent is stressed not by loads but by internal linear deformations — due to shrinkage or to change of temperature — apply a moment to the analogous column equal to this deformation and about its line of action. In this case the quantity EI must be given its true value, with due attention to the units used.

(5) For movement of supports apply a moment to the analogous column as above if the support moves without rotation; otherwise apply on the analogous column at the center of rotation a load equal to this rotation.

The components of the redundant reaction are given by

$$v_i = \frac{M_x'}{I_x'} = \frac{M_x - M_y \dfrac{I_{xy}}{I_y}}{I_x - I_{xy}\dfrac{I_{xy}}{I_y}} \quad \text{and} \quad h_i = \frac{M_y'}{I_y'} = \frac{M_y - M_x \dfrac{I_{xy}}{I_x}}{I_y - I_{xy}\dfrac{I_{xy}}{I_x}}$$

which reduces, in the case of a symmetrical section, to

$$v_i = \frac{M_x}{I_x} \quad \text{and} \quad h_i = \frac{M_y}{I_y}.$$

The intercepts on axes through the centroid of the section are

$$x_1 = -\frac{P}{Av_i} \quad \text{and} \quad y_1 = -\frac{P}{Ah_i}.$$

A convenient basis for the computation of all indeterminate moments is to locate first the neutral axis of the analogous column and find one component of the indeterminate force acting along the axis.

The components of the indeterminate force are changes in the reactions from those existing under the static conditions assumed. We may find the components of the reactions as $V = v_s - v_i$ and $H = h_s - h_i$.

With the components of the reactions known it becomes a simple matter to draw the pressure line.

The pressure line for the structure may sometimes be drawn con-

veniently by superimposing the curve of statically determinate moments on the neutral axis to a vertical scale of $h_i = 1$ or to a horizontal scale of $v_i = 1$ according to whether the moment is laid off horizontally or vertically. This construction of the moment curves was illustrated on page 71, Chapter III.

Fig. 7 shows the solution of a small rigid-frame shed included here partly as a simple problem illustrative of the elementary method and

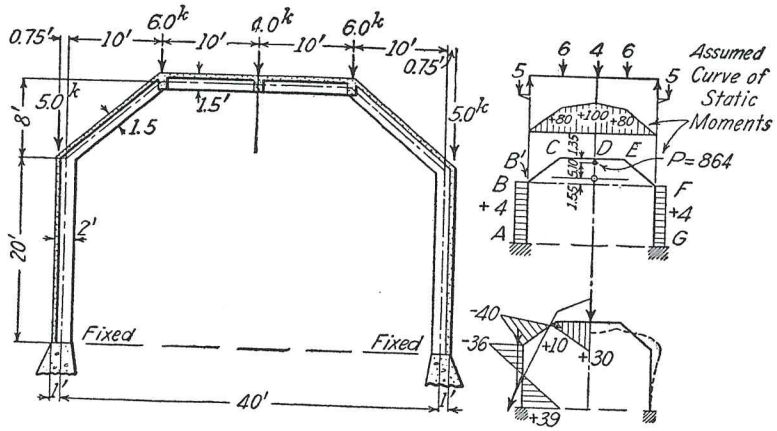

L	I	a	y	ay	ay²	i_0	m	ma	y'	may
20	8	2.5	18	45	810	83	4	10	18	180
12.8	3.38	3.8	4	15	60	20	40	152	2.67	406
10	3.38	3.0	0	0	0	0	90	270	0	0
		9.3	6.45	60	870	103		432	1.35	586
		18.6			973			864	5.10	
					-387			864×5.10 =		
				I_y =	586 ×2=1172			M_y=4410		

$m_A^i = \frac{864}{18.6} - \frac{4410 \times 21.55}{1172} = 46 - 81 = -35 \qquad M_A = +4+35 = +39^k$

$m_B^i = 46 - 3.76 \times 1.55 = 46 - 6 = +40 \qquad M_B = +4-40 = -36, \quad M_{B'} = -40$

$m_C^i = 46 + 3.76 \times 6.45 = 46 + 24 = +70 \qquad M_C = +80 - 70 = +10$

m_D^i ---- ---- ---- ---- $= +70 \qquad M_D = +100 - 70 = +30$

$H = \frac{75}{20} = 3.75^k \qquad V = 13.0^k \qquad R = 13.5^k$

FIG. 7. Symmetrical Bent — Column Analogy.

partly to supply data for a solution of the same problem in Fig. 8 by the more general procedure of sketching in the pressure line directly.

In this problem the relative value of I is assumed to be equal to the cube of the depth of member. Because of the symmetry of the section it is necessary to compute the properties of the analogous column only in the Y direction. The assumed static moment curves are shown in the upper part of the figure, all signs being positive in accordance with the usual convention.

Fig. 8 shows a solution of the same problem by the general procedure of first locating the neutral axis of the elastic section.

Data from Fig. 7:-

$$\frac{P}{A} = \frac{864}{18.6} = 46.5 \qquad v_i = \frac{M_x}{I_x} = 0 \qquad h_i = \frac{M_y}{I_y} = \frac{4410}{1172} = 3.77^k$$

$$x_1 = -\frac{P}{Av_i} = \infty \qquad y_1 = -\frac{P}{Ah_i} = -\frac{46.5}{3.77} = -12.3'$$

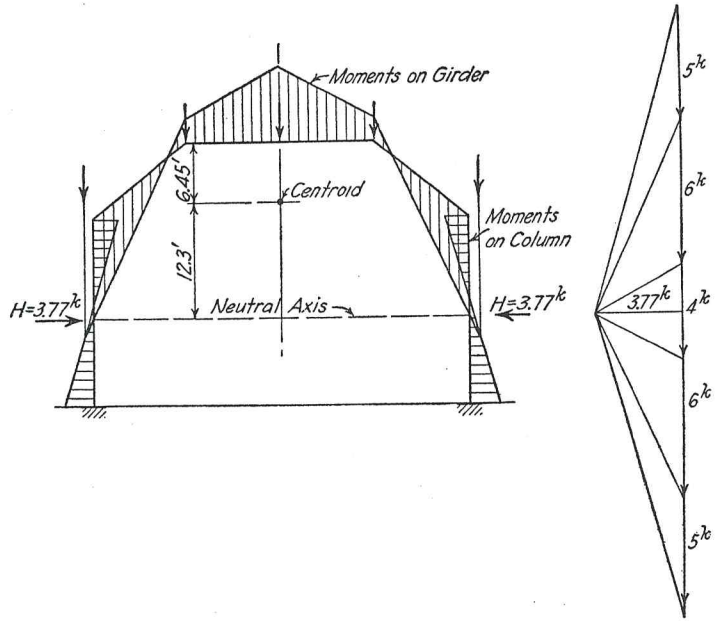

FIG. 8. Symmetrical Bent — Pressure Line (From Fig. 7).

In Fig. 9 an unsymmetrical bent with horizontal load further illustrates the general procedure.

Analysis of Rectangular Bents by Moment Distribution. If the bent is rectangular, it is often more convenient to analyze it by moment distribution with proper correction for sidesway than by the column analogy. This perhaps is not true where the I/L values are nearly the same for column and for girder, but in the normal case, where the girder is very heavy compared with the column, the conception is very useful.

If the bent is symmetrical as to form and loading and we use end rotation constants, then for vertical loading as shown in Fig. 10 (*a*) the $1/C$ value is 1 for the column and 1/2 for the girder. If the girder is moved horizontally without rotation of the ends by some force, as shown in Fig. 10 (*b*), then in distributing the end moments, $1/C$ is 1 for the

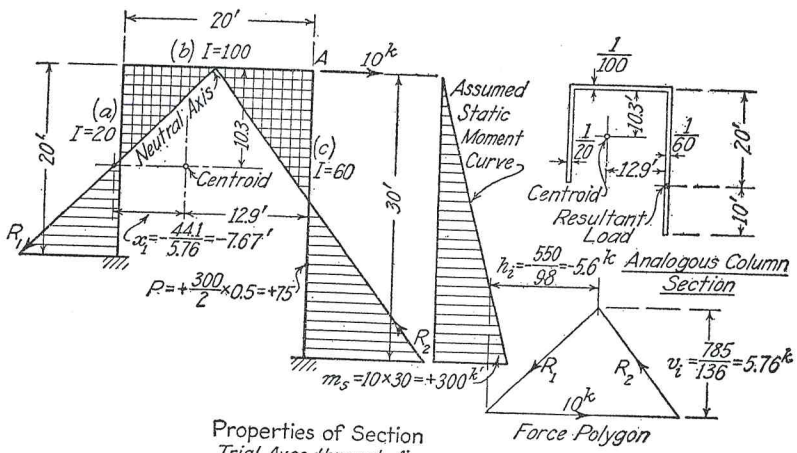

Properties of Section
Trial Axes through A

Section	a	x	y	ax	ay	ax^2 / i_o	ay^2 / i_o	axy / i_{xy}
(a)	1.0	-20	-10	-20	-10	400 / 0	100 / 33	+200 / 0
(b)	0.2	-10	0	-2	0	20 / 7	0 / 0	0 / 0
(c)	0.5	0	-15	0	-7.5	0 / 0	112.5 / 37.5	0 / 0
	1.7 / A	-12.9 / $\bar{x}$	-10.3 / $\bar{y}$	-22	-17.5	427	283	+200

$P = 75$
$A = 1.7$
$\frac{P}{A} = 44.1$
$\bar{x} = \frac{-22}{1.7} = -12.9$
$\bar{y} = \frac{-17.5}{1.7} = -10.3$
$M_x = +75 \times 12.9 = 968$
$M_y = +75 \times (-9.7) = -727$

Correcting to the Centroid

$I_x = 427 - 1.7(12.9)^2 = 143$

$I_y = 283 - 1.7(10.3)^2 = 103$

$I_{xy} = +200 - 1.7(-12.9)(-10.3) = -26$

Correcting for Dissymmetry

$M_x' = +968 - \left(-727 \frac{-26}{103}\right) = +785$

$M_y' = -727 - \left(+968 \frac{-26}{143}\right) = -550$

$I_x' = 143 - \left(-26 \frac{-26}{103}\right) = 136$

$I_y' = 103 - \left(-26 \frac{-26}{143}\right) = 98$

FIG. 9. Unsymmetrical Bent — Column Analogy.

columns and 3/2 for the girder. Hence for vertical loading we may take the relative stiffness of the column to be twice as great as indicated by I/L and for horizontal displacement we may take it as two-thirds as great.

The problems of Fig. 11 (*a*) and (*b*) show the method. If the girders are quite deep or the columns quite wide, the solution errs in neglecting the fact that little flexure can occur within the joint.

In Fig. 11 (*b*) the same dimensions were assumed as in (*a*). It is desired in this case to compute the moments due to a 10^k load as shown.

We first assume any fixed-end moments — say 100 at each end — distribute them, compute the total shear and then multiply by the ratio of the load to this shear.

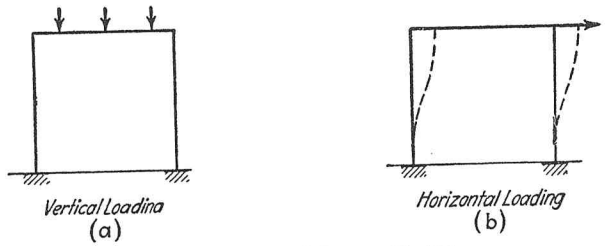

FIG. 10. Symmetrical Bent with Sidesway.

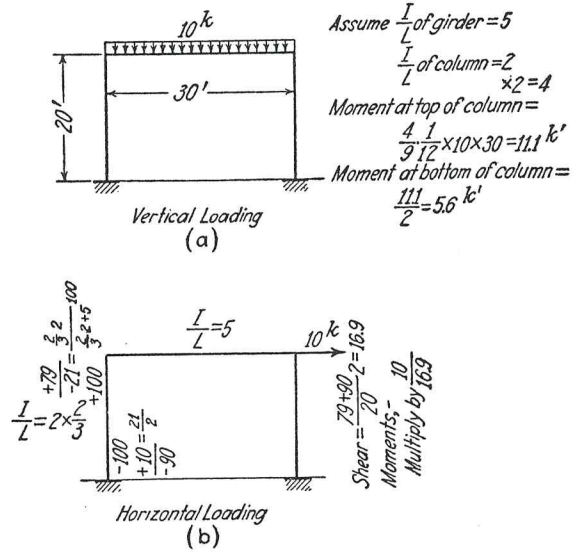

FIG. 11. Symmetrical Bent — Moment Distribution.

For other illustrations of the application of moment distribution to rectangular bents, see Chapter IV.

Remarks on Sidesway. In analyzing a bent by moment distribution we first assume no movement of the joints and analyze for this condition, find by statics the force necessary to prevent such movement and find the moments which it would produce, and then take the difference of the two results. This is referred to as correcting for sidesway.

If we analyze the bent by the column analogy, the question of sidelurch does not enter into the solution. The method of moment dis-

tribution is a method of thinking about what is happening in the structure; the column analogy is a mechanical tool for analyzing the structure. It is characteristic that the method at once raises a question as to whether such sidelurch is possible, but the tool raises no question at all.

Frequently sidelurch is not possible in bents, or at least is not free. Suppose we have an industrial building consisting of a series of bents carrying a roof and a crane runway. The crane is supposed to rest on one of these bents and to produce a side thrust at the crane girder level.

But the roof is rigid in a horizontal plane, especially if it is of monolithic concrete. Hence this bent cannot lurch sideways by itself but must carry the neighboring bents with it. The columns carrying the crane thrust, then, are nearly fixed-ended beams.

A transverse bent of a viaduct is analyzed for an unsymmetrical load condition. Moment distribution indicates sidelurch. But if the viaduct is of reinforced concrete and the roadway is a concrete slab, this bent alone cannot lurch sideways without carrying neighboring bents with it. By computing the relative deflections of the top of the bent due to unit force acting there, assuming first that it is all carried by the bent and then assuming it all carried by the horizontal girder to neighboring bents, we can distribute the force producing sidelurch in proportion to the "stiffness of the stress paths."*

Fig. 12. Column with Bracket Load.

These remarks apply also to the effect of an eccentric crane load on a column† or to the stresses produced by a jib crane acting on a column. In neither case is the bent free to lurch sideways, and if the roof is properly braced horizontally the loaded column is more nearly a fixed-ended beam than a member of a free bent.

Another case of some interest occurs where sidesway seems indicated in a frame which is surrounded by earth — an unsymmetrical culvert, a so-called rigid-frame bridge, a subway. The sides of the structure are normally subjected to active earth

* A dangerous but convenient term.

† It may be remarked here that much naïve mathematics can be wasted on the problem of a reinforced-concrete column subjected to a bracket load (Fig. 12). If the column were of uniform section we could go through a mathematical analysis; but the bracket is usually quite large compared with the column, and if we want to be precise we should try to make some allowance for this. We know well enough that about half of the moment of the bracket is carried on each side of it unless the bracket is very near the top, in which case nearly all goes to the part of the column above the bracket. Some computations for such typical cases are worth while for the student; the remarks here refer to naïve faith in the precision of analysis which neglects the enlargement of the column section at the bracket.

pressure. If, owing to dissymmetry in shape or loading, the frame tends to lurch sideways, passive earth pressure is brought into action. Of course, if the earth has shrunk away from the walls, we have no earth pressure. We must, then, consider the possibilities of no earth pressure, active earth pressure, some passive earth pressure in certain cases. Structures of this type need a great deal of thought for their design, and thought about the action of the structure is much more important than precision of analysis. Thus the analysis of a bridge of the type shown in Fig. 13 as a free frame subject to vertical loads and to active earth pressure is incomplete.

Of course, if all bents in a series lurch together, the lurch is free. This would result from wind pressure on a mill-building which had no

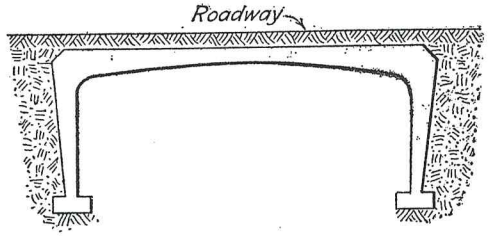

Fig. 13. Rigid-frame Bridge.

transverse bracing in the ends. If there is bracing in the ends, bents near the ends cannot lurch freely; if also the roof is very stiff, no bents can lurch freely.

The stresses produced in a bent by horizontal forces are rarely worth very much precise analysis, but they are worth a good deal of thought, not for the bent itself so much as because study of the action of the structure leads to an understanding of the function of horizontal bracing.

Arched Bents. Use of False Ties. Arched bents without tie rods are sometimes desirable, though they are obviously very poor arches. As explained above, the pressure line in such structures is quite sensitive to changes in the shape and dimensions of the structure.

The design of the structure is largely controlled by the moments due to the vertical load, and it may be seen that for vertical loads the problem is largely one of the design of a beam of varying section fixed at ends and loaded with a concentrated load. Thus, in Fig. 14 the arched bent may be thought of as a combination of the tied arch, which would have no bending in it, since rib-shortening is scarcely a factor in this problem, modified later by removal of the tie. Now the stress which would exist in the false tie rod is known, $\frac{1}{8} W \frac{L}{h}$, and this may now be

applied as concentrated loads on opposite sides of the bent. The moments, then, are those due to a concentrated load on a curved beam fixed at ends. Note that this curved beam is not an arch; there is no vertical shear at the crown.

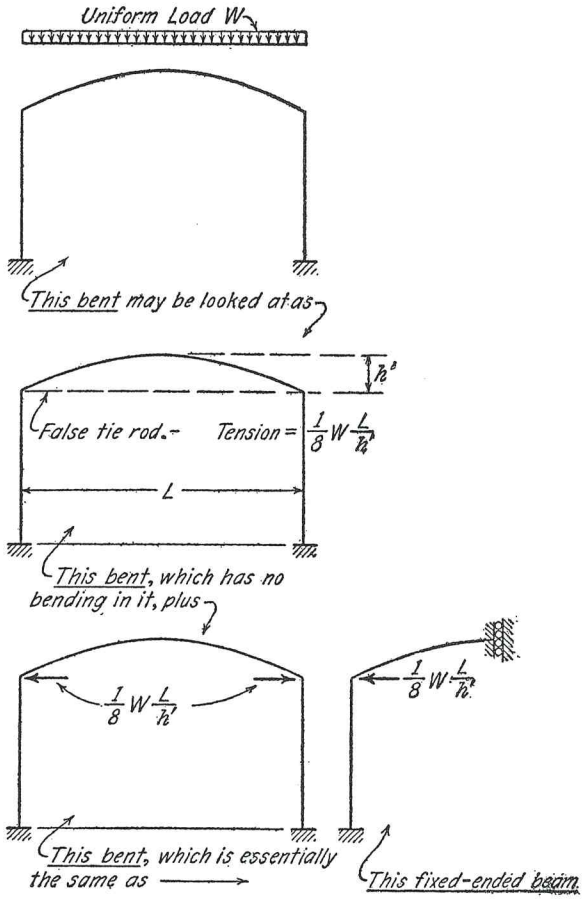

FIG. 14. Arched Bent — Use of False Tie.

This does not clear up the problem entirely, since the exact analysis of such a beam by the column analogy involves the same computations as does the analysis of the original structure. It does, however, give a new light on the action of the structure and certain limits on the moments produced. We know what the end moments would be if this beam were straight and of uniform section.

This conception may be extended to a series of arched bents. See Fig. 15. Here the end column and arch do not act as a fixed-ended beam, and are not readily analyzed.* However, it is easy to see the ineffectiveness of the arch series in carrying the unbalanced thrust at the end. This, of course, produces a large shear in the end column, though somewhat less than the unbalanced thrust. The general inefficiency of the construction is evident.

A construction similar to this and slightly more effective is shown in Fig. 16 (*a*). If the girder is relatively quite stiff the points of inflection in the columns will be near their midpoints. We can in this case distribute the arch thrust between arch and columns in proportion to the force necessary to produce unit horizontal displacement. By the

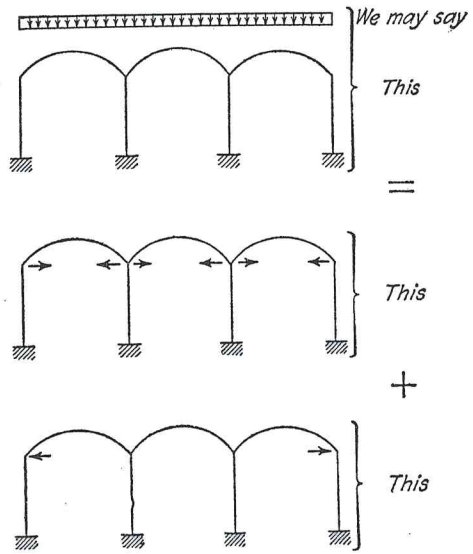

FIG. 15. Continuous Arched Bents — Use of False Tie.

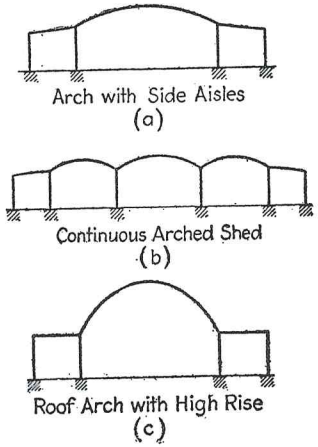

FIG. 16. Continuous Arched Frames.

column analogy this is $1/I_y$. Note, however, that the arch is stretched twice as much as either column is deflected; we may allow for this by doubling its stiffness.

I_0 for straight member of uniform section is $\frac{1}{12}\frac{L}{I}L^2$. For an arch the value may be taken roughly as $\frac{1}{12}\frac{L}{I}h^2$, where I is the moment of inertia

* Exact analysis of these structures involves the theory of continuous arches on very flexible piers. See Chapter IX.

at the crown. Unless the columns have abnormally large I values or the rise of the arch is very great, the arch will lose nearly all its thrust.

If there are several arches in the series, as shown in Fig. 16 (b), the shear in the end columns is somewhat greater, the resistance to horizontal movement of the whole series of arches being less than in the case of one arch.

The case is of course not so bad where the arches are of high rise, as shown in Fig. 16 (c).

C. Wind Stresses in Industrial Buildings

Method of Analysis. In mill-buildings and low frame buildings such as garages and hangars the girders are commonly quite stiff in comparison with the columns. If we treat the girder as infinitely stiff relative to the columns, the problem is much simplified.

Let us lead up to the problem by considering a simple symmetrical two-legged bent, Fig. 17, exposed to wind. The end moments in the column are $1/12\ Wh$ if we prevent sidesway of the girder. The thrust against the girder necessary to prevent such sidesway is evidently $W/2$.

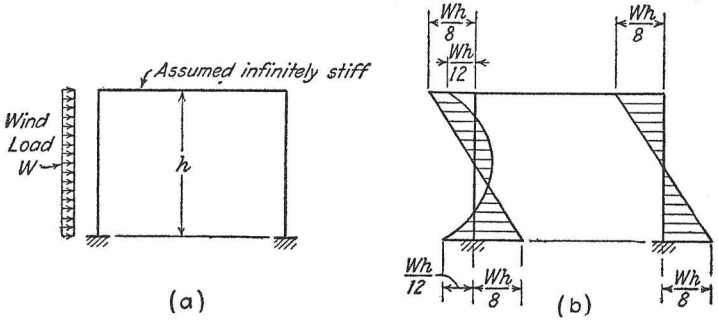

FIG. 17. Wind Pressure — Rectangular Bent.

Since there is no such force we must now subtract the moments which would be produced by it, or $\pm\frac{1}{2}\frac{Wh}{2\ 2} = \pm\frac{Wh}{8}$, at top or bottom of each column. The curve of moments in the columns, then, is that shown in (b).

If the bent has three legs, is unsymmetrical and has in addition a parapet or roof projecting above the girder, as shown in Fig. 18, then in column A, owing to fixed-end condition without sidesway, we have a curve of moments as shown in (a). The force to prevent sidesway is

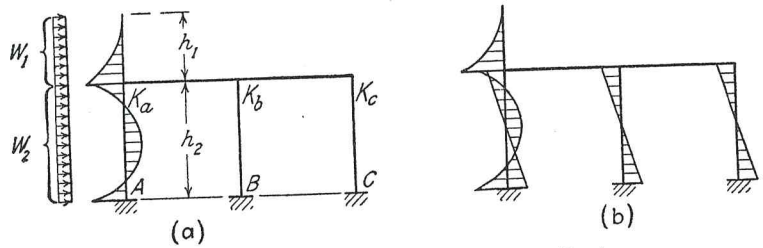

FIG. 18. Wind Pressure — Continuous Bents.

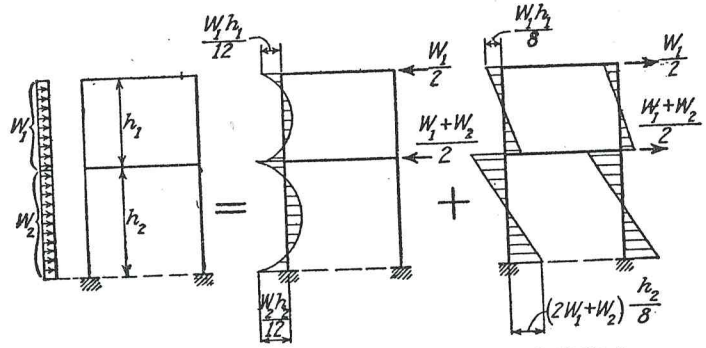

FIG. 19. Wind Pressure — Two-story Bent — Stiff Girders.

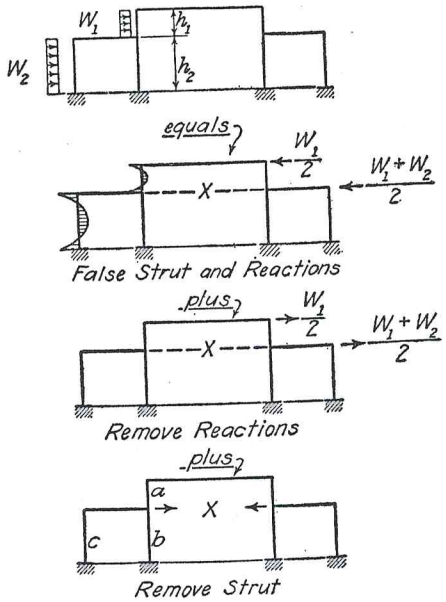

FIG. 20. Wind Pressure — Mill Building.

$W_1 + \frac{1}{2} W_2$, and this produces, when removed, moments of

$$\frac{K_a}{K_a + K_b + K_c} \frac{h_2}{2} (W_1 + \tfrac{1}{2} W_2)$$

in column A, and in columns B and C moments proportional to their K values. The total curve of moments then is that shown in (b).

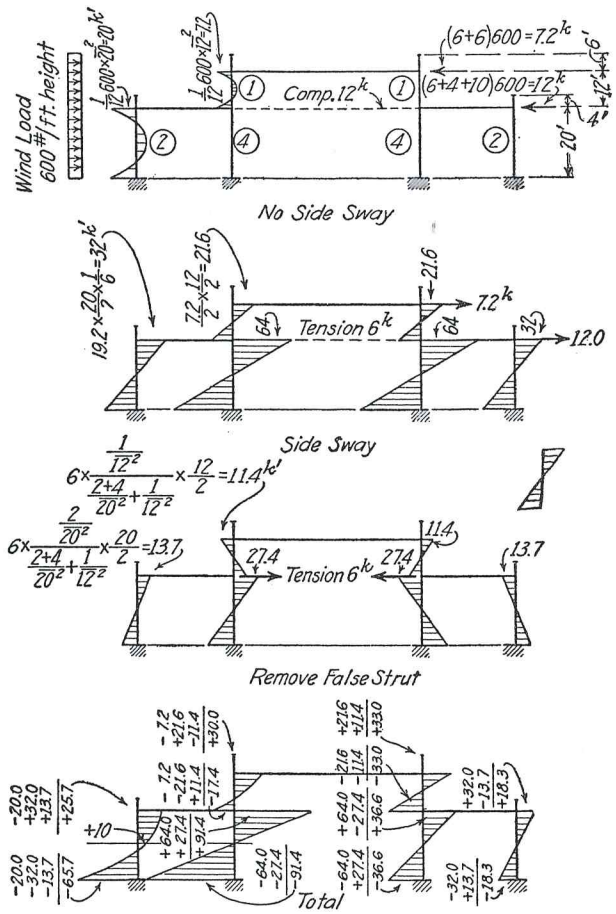

Fig. 21. Wind Pressure — Mill Building.

Now let us progress to a bent two stories in height but still having girders so stiff that we may neglect their flexure. We may proceed as shown in Fig. 19.

Now consider the common mill-building type of Fig. 20. This may be analyzed by successive steps as indicated in the figure. We first

introduce a false member x across the gap and transform the problem into that of a two-story bent, and then after finding the stress in x we remove it and correct for the removal.

This introduces a new element in the problem. Here the load x is distributed to the members a, b and c in the ratio of their K/h^2 values, since the deflections of the ends are the same but the lengths are different. Fig. 21 shows numerical values for such a case.

We may use the same method in analyzing for wind stresses a structure such as that shown in Fig. 22.

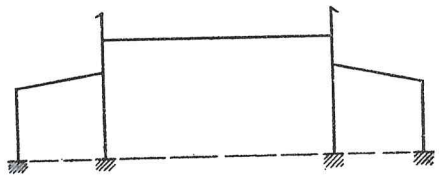

Fig. 22. Mill Building with Side Aisles.

The same method may be used in analyzing for stresses due to crane thrusts, for those due to the moments produced by jib cranes or by cantilever balconies or canopies, if we are satisfied that sidesway is possible; in any case it lends itself readily to estimates of the restraining action of roofs or of horizontal bracing. It depends for its validity upon the assumption of infinite stiffness in the girders or roof trusses. In general, if the I/L of the girder is more than five times that of the column, we may neglect the flexure of the girder.

Distribution of Shears to Members "in Series" and "in Parallel." In most cases, where the total shear is known, it is to be distributed to

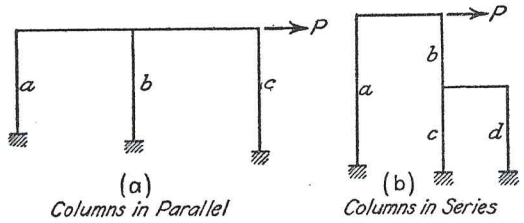

Fig. 23. Distribution of Shears.

the columns so that the relative horizontal deflections of the ends of all columns is the same. The columns may be said to be "in parallel," to borrow a term from electrical engineering. Where several columns act together so that their deflections are added to each other, however, we may say that they are "in series."

The deflection of a column fixed at ends varies as $\frac{HL^3}{EI} = H \frac{1}{K/L^2}$.

Where the columns are in parallel, the relative deflection between top and bottom is the same in all columns and $H \propto (K/L^2)$. Thus in

Fig. 23 (*a*), the shear is distributed between the columns so that

$$H_a = P \frac{\dfrac{K_a}{L_a^2}}{\dfrac{K_a}{L_a^2} + \dfrac{K_b}{L_b^2} + \dfrac{K_c}{L_c^2}}$$

In Fig. 23 (*b*), the columns *b* and *cd* are in series and this group is in parallel with *a*. The deflection at the top of *a* varies as $H_a \dfrac{1}{K_a/L_a^2}$. The deflection of the top of *b* relative to the bottom of *b* is proportional to $H_b \dfrac{1}{K_b/L_b^2}$. The deflection at the top of *c* relative to the bottom of *c* is proportional to $H_c \dfrac{1}{K_c/L_c^2}$. But since *c* and *d* are in parallel

$$H_c = H_b \frac{\dfrac{K_c}{L_c^2}}{\dfrac{K_c}{L_c^2} + \dfrac{K_d}{L_d^2}}$$

Hence Total Δ at top of $a \propto H_a \dfrac{1}{\dfrac{K_a}{L_a^2}}$

Total Δ at top of $b \propto H_b \left[\dfrac{1}{\dfrac{K_b}{L_b^2}} + \dfrac{1}{\dfrac{K_c}{L_c^2} + \dfrac{K_d}{L_d^2}} \right]$

If we call the deflection due to unit shear the flexibility, we may state that

(1) The flexibility of a single column is measured by L^3/I or by L^2/K.
(2) The flexibility of a group of columns in parallel is the reciprocal of the sum of the reciprocals of the flexibilities of the constituent columns. In other words, we compound the flexibilities.
(3) The flexibility of a series is the sum of the flexibilities of its constituent parts.
(4) Where a shear is to be divided between several paths, the distribution is inversely proportional to the flexibilities of the paths.

It is desired to distribute the shear of 100^k among the columns in Fig. 24 on the assumption that the girders are infinitely stiff. The steps to be taken are probably clear enough.

(1) Compute flexibility of each column.
(2) Compound flexibilities of columns *c* and *d*.

(3) Add flexibilities of *b* and *cd*.
(4) Distribute shear in inverse proportion to flexibilities *a* and *bcd*.
(5) Distribute shear in *bcd* between *c* and *d* inversely as their flexibilities.

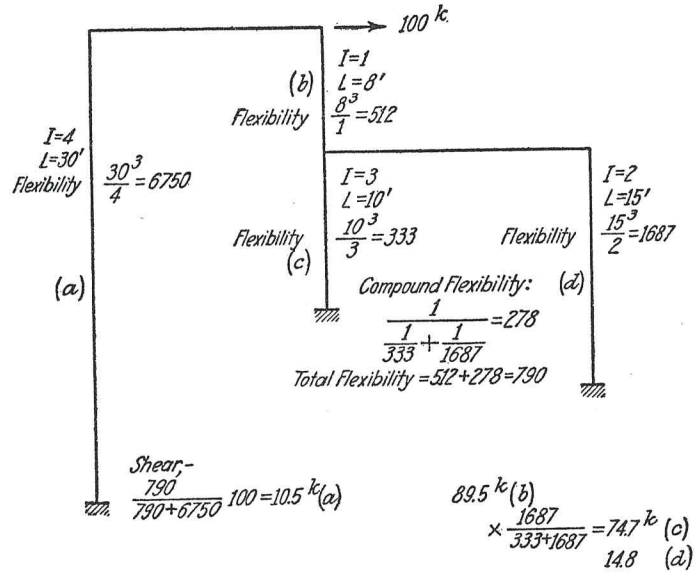

FIG. 24. Distribution of Shears.

Another illustrative problem, Fig. 25, may be worth outlining. The paths are more complicated in this case, but the same principles may be applied.

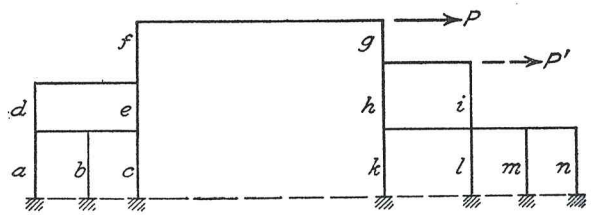

FIG. 25. Distribution of Shears.

To distribute the shear *P*:

(1) Compound flexibilities *abc* and *klmn*.
(2) Compound flexibilities *de* and *hi*.
(3) Add flexibilities *f* and *de* and *abc* and also add flexibilities *g* and *hi* and *klmn*.

(4) Distribute shear P to *f–de–abc* and to *g–hi–klmn* inversely as the total flexibilities just found.
(5) Distribute the shears just found between *d* and *e* and between *a* and *b* and *c*.
(6) Distribute similarly on the right side.

If in such a case there are transverse loads at each floor level, the device of using false members may be used if the structure is symmetrical; otherwise this method leads to some difficulties when the false member is removed. Suppose in the case just given it is desired to distribute a load at a lower floor level such as P' in Fig. 25.

As before, *abc* are in parallel, as are also *de* and *hi* and *klmn*. In distributing P' the paths *abc*, *def* and *g* are in series; also the paths *hi* and *klmn* are in series. Compute the total flexibilities of these two paths by addition, distribute P' between them and then distribute the constituent parts of P' between the paths which are in parallel.

Stepped Columns. Where the column is stepped out to give support to a bridge crane, the moment of inertia varies and a special analysis is needed to determine the end moments and the other constants needed. This is most conveniently done by use of the column analogy.

Otherwise the method follows exactly the procedure previously outlined. We draw the curve of moments as a fixed-ended beam, find the reaction at the top of the column, distribute this reaction as shear to all the columns and draw the curves of moments produced by this shear.

The problem of the stepped column is more common in steel mill-buildings than in concrete frames.

D. Wind Stresses in Multi-story Buildings

The problem of the stresses produced in high buildings by wind has long occupied the attention of engineers in the case of buildings of steel, and the increase in height of buildings built of reinforced concrete has in recent years extended the problem to this field. Anyone who has given any thought to the subject knows that these structures are highly indeterminate. The chief function of the present discussion is to consider the problem in indeterminate structures involved. The problems of what wind pressures should be provided for and of how they would best be provided for are more important; no attempt is made here to discuss them.

In general, the problem of wind stresses in high buildings differs from that discussed in the previous section in the relative stiffness of the girders and columns; in low industrial buildings, the girders are normally stiff and the columns light and flexible, whereas in high buildings for office or resident use, the relative stiffness of the girders is not in general much greater than that of the columns and may even be less than that of the large columns in the lower stories.

Let us summarize here what is at once evident or easily ascertained with reference to the problem.

(1) If the girders were very stiff compared with the columns, and the relative deflection of the two ends is the same in all columns, the shears in any story would be distributed among the columns in proportion to their I values, and in all columns the point of inflection would be at the midpoint.
(2) If the girders have no stiffness the columns cannot carry any shear (because they cannot have end moments) and if this is true of all girders, the building will collapse under wind pressure.
(3) Actually, walls and partitions act to some extent as girders, though they are not designed to do so and are therefore not very dependable for this purpose.
(4) If the floor is of stiff construction, as is a floor of reinforced concrete, the relative deflection of the two ends of all columns is the same if the building is symmetrical, and the difference of the relative deflections in the columns in other cases varies as the distance along the floor to each column from some center of rotation.
(5) Since the flexure of the girders as well as that of the columns is an element in the problem, wall columns or other columns which are connected to only one girder would be expected to carry less shear than do interior columns which are connected to two girders.
(6) A column carries less shear if it is itself flexible or if it is connected to a flexible girder.
(7) The point of inflection in any column tends to move toward the end connected to the weaker girder.

Approximate Analysis. An approximate analysis in common use which commends itself is based on the following assumptions:

(*a*) Points of inflection are at midpoints in all members.
(*b*) Wall columns take half as much shear as do interior columns.

From these assumptions all moments and shears may be computed by statics.

Fig. 26 shows the analysis of all forces at the fourth floor of a building.

(1) The shears in the columns above and below this floor are first found

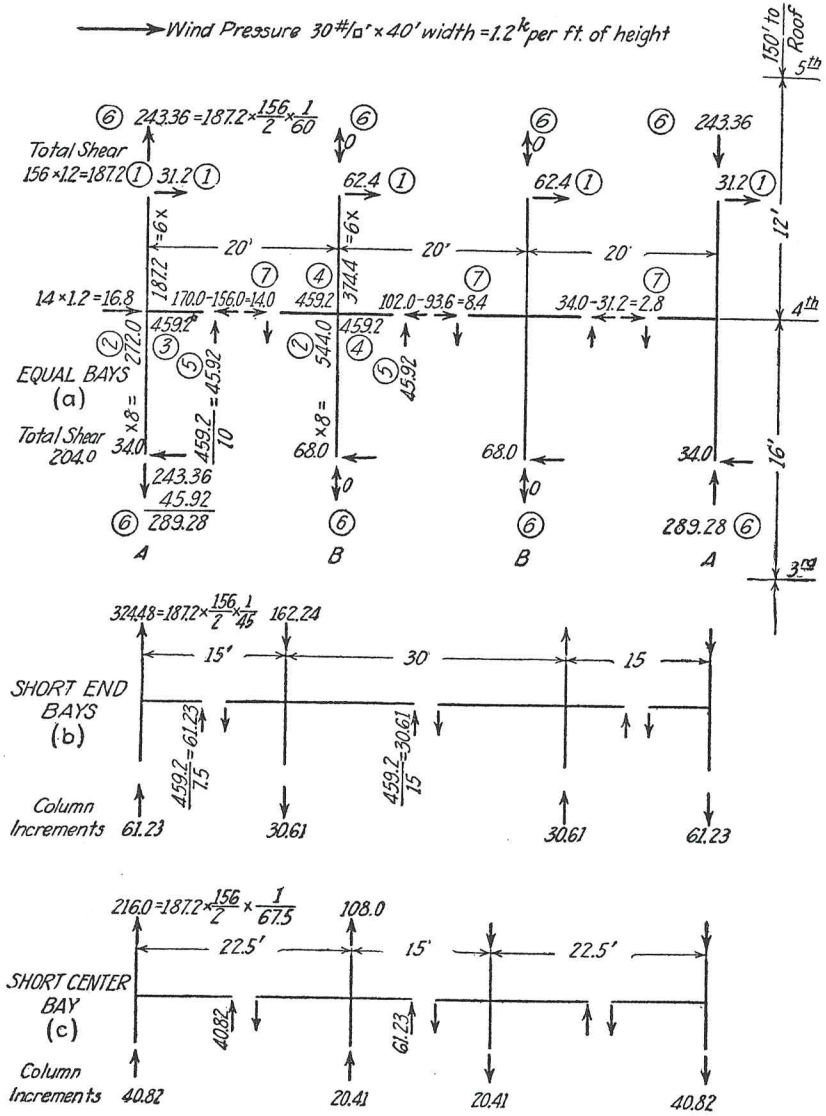

FIG. 26. Wind Stresses — High Buildings — Approximate Analysis.

by dividing the total shear at the middle of the story among the columns according to assumption (*b*) above.

(2) The shear in any column times the half story height gives the moment in the column at the center line of girder by assumption (*a*).

(3) The wall end of the end girder carries a moment equal to the sum of the moments in the connecting columns.

(4) The moment at the inner end of this girder is the same as at the outer end by assumption (*a*). We then know three of the four moments at *B*, and the moment in the other girder follows by subtraction to balance the joint.

(5) The shears in the girders then follow as the moment at one end divided by the half span.

(6) These shears are increments of column load; knowing the relative values of the column loads we can find, from the total moment of the wind pressure about the midpoint of any story, the direct load due to wind on any column.

(7) By adding the differences of the shears in the columns above and below any floor, beginning at the leeward side, we can find the thrust in any girder (a value of no importance for design).

The numbers in circles on the diagram show the order in which the steps are taken as listed above.

It will be noted that, if the spans are equal, there is no direct load on any of the interior columns. If the spans are unequal, we find direct loads on the interior columns by this method, their directions and values depending on the relative span lengths. Thus in the above case, for spans of 15′ – 30′ – 15′, we get girder shears and column increments as shown in Fig. 26 (*b*). If x is the load on the outer columns at any mid-story the moment is $60x - 30\,\frac{x}{2} = 45x$; we may find the load on the outer columns by dividing by 45 instead of 60.

In Fig. 26 (*c*), for spans of 22′.5 – 15′ – 22′.5, the moment, due to a load x on the outer columns, is $60x + 15\,\frac{x}{2} = 67.5x$; we may find the load on the outer columns by dividing by 67.5.

Understand that these relations result merely from carrying through logically an approximate method; they are not correct, though the discrepancies are probably not very important.

Function of Wind Bracing. Wind bracing in buildings has three functions:

(*a*) The reduction of the amount of vibration produced by gusts of wind. Very little work has been done in this field. Some high build-

ings, however, are said to be subject to sensible vibration from wind, to the annoyance of tenants. But we know very little about the psychology of such annoyance. Moreover, for obvious reasons, owners do not favor investigations on their buildings and such data as are obtained are rarely available for publication.

It does not seem probable that the vibration of a building is necessarily a sign of danger; but such vibration is obviously objectionable. Vibration is best checked by the use of deep members and by a general distribution of the bracing throughout the building. Probably the amount of reinforcing steel used has comparatively little to do with it; and " exact " analyses made with a view to placing reinforcing steel are not very important from the viewpoint of vibration.

(*b*) The prevention of local cracking of the building. Here also vibration doubtless plays a large part. So also, however, does local overstress. Attempts to determine accurately the proper amount of reinforcing steel are more significant here. More important still is attention to details, especially to proper anchorage of bars.

(*c*) The prevention of collapse of the structure. Here again exact analyses are probably not especially important. Adequate provision must be made for total resistance to wind, but in a structure in which all deformations are as intimately related as are those in any one story of a building frame subject to wind pressure, the yielding of one part tends at once to a general redistribution of stress relieving the overloaded part. Such redistribution becomes very important before collapse occurs.

More Exact Studies. The laws of statics tell us a good deal in these problems; usually they tell us all that we really need to know in order to design the structure safely. In any given story the total shear is the total wind pressure above that story, which is assumed to be known. The sum of all bending moments at the top and at the bottom of all columns is, then, this shear multiplied by the height of the story. We may say, then, that the total moment in the story Hh is distributed in some way to the ends of the columns. If the moments at the ends of the columns are known, the total moment in the girders at any joint is known, and this moment is distributed in some way between the girders meeting at that joint. After the moments at the ends of the columns and at the ends of the beams are known, all other quantities — the

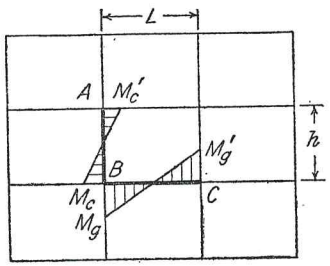

FIG. 27

shears in each column, the shears in the girders, the thrusts in the girders, the direct load on the columns — may be determined from statics, as shown above.

The first problem, then, is to determine the proper distribution to the ends of the columns of the total moment in any one story. We can write a rational expression for this, even though it is difficult to apply.

Consider the column and girder shown by heavy lines, Fig. 27, as a part of the building frame shown. The deflection of point A horizontally with reference to point B is the result of flexure in the column and of rotation of the end of the column where it is connected to the girder. The deflection of the point A from the tangent at B may be written

$$\frac{1}{E} M_c \frac{h}{6} \frac{h}{I_c} \left(2 - \frac{M_c'}{M_c}\right)$$

The rotation of the end of the girder at B may be written

$$\frac{1}{E} M_g \frac{1}{6} \frac{L}{I_g} \left(2 - \frac{M_g'}{M_g}\right)$$

which produces at A a further deflection

$$\frac{1}{E} M_g \frac{h}{6} \frac{L}{I_g} \left(2 - \frac{M_g'}{M_g}\right)$$

The total deflection at A with reference to B, then, is

$$\Delta = \frac{1}{E} \frac{h}{6} M_c \left(C' \frac{h}{I_c} + C'' \frac{L}{I_g} \frac{M_g}{M_c}\right)$$

where $$C' = 2 - \frac{M_c'}{M_c} \quad \text{and} \quad C'' = 2 - \frac{M_g'}{M_g}$$

These constants depend on the location of the points of contraflexure in column and in girder.

Normally the moment is nearly the same at the two ends of any column and at the two ends of any girder. Hence C' and C'' are both approximately equal to 1. The wall end of a girder takes the moment from two columns, whereas the interior girder takes a moment more nearly equal to that in one column. Approximately, then, for a wall column $M_g/M_c = 2$ and for an interior column $M_g/M_c = 1$.

If, further, we assume that the stiffness of the girder is the same as that of the column, so that $I_c/h = I_g/L$, we see that a wall column would carry two-thirds as much shear as an interior column. The assumption made in the approximate analysis indicated above is that the wall column carries half as much shear as does an interior column.

The relations derived above are entirely rational, but beg the question.

Nevertheless they show that K_c and K_g are equally important factors in the distribution of the total moment in the story. The larger moments go to the larger columns and to the columns connected to stiff girders.

The sum of the end moments in two columns at a joint is distributed to the girders in proportion to $\dfrac{K_g}{2 - \dfrac{M_g'}{M_g}}$, which again begs the question, since we do not know M_g'/M_g, and yet throws some light on it. Roughly the moments are proportional to the stiffness of the girders; but the correction factor for point of inflection may be more important than K. Of course, with known column moments, the girders may be analyzed as continuous girders.

It is well to distinguish the problem of wind stresses in tall buildings from the problem of stresses due to wind and other horizontal forces in low structures of quite irregular framing. In the former case the points of inflection do not usually depart very far from the midpoints of the columns and of the girders, and the moments in the columns are distributed nearly equally to the connecting girders. The necessary corrections are, then, usually small and negligible. Low structures such as bents, mill-buildings, hangars are especially characterized by the relatively great stiffness of the girders as compared with the columns. The analysis of these structures has been discussed above.

Mezzanine Floors. Where mezzanine floors occur in buildings (Fig. 28), the principle used in shear distribution no longer holds, since the

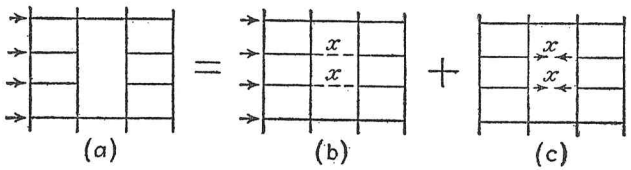

FIG. 28. Mezzanine Floors in Buildings — Use of False Struts.

deflections of the columns are not alike on the two sides of the aisle. In such cases we may add two imaginary hinged girders as shown dotted in Fig. 28 (*b*), determine the thrust in these and then neutralize this thrust by opposite forces. Consideration of one case, however, will show that the problem can rarely be very important. By symmetry the compression in such imaginary girders is half the panel load. Since no such compression exists, there being no such girders, it must be neutralized in order to effect a correct solution. Hence we should add the stresses due to the condition of loading shown in Fig. 28 (*c*). We can estimate the effect well enough by assuming the shear of x on the

columns on each side in the stories above, and below, the mezzanines added or subtracted according to the position of the story.

In general we can add these imaginary girders and neglect the effect of mezzanines without much error.

The "Exact" Methods are not Exact. Apparently, no "exact" solution of wind stresses has been published, and the use of the terms "exact," "theoretical," "precise" in this connection is further abuse of these much misused words. In the first place, all solutions which have been made in the interest of exactness have assumed uniform sections for the members to the center of their intersection with other members. The limitations of flexure in the brackets if included in a mathematical solution — and there is not much additional difficulty in including them — would affect the results appreciably.

More important still, exact solutions are apparently impossible. There does not appear to be any way to determine the stress conditions due to wind, either by analysis or by experiment, because they depend so much on chance. We can, however, form some idea of the worst set of conditions and provide for it. But this worst set of conditions is not always represented by the usual "exact" analyses. The maximum wind stresses in columns may occur not when no wall panels act to relieve the columns but when certain panels act and certain panels do not act. This condition may be a result of accident in construction or of alterations or of failure in a severe wind. Thus, in Fig. 29, if all neighboring wall panels fail or are ineffective except the one shown shaded, columns A and B will carry more than their normal share of the shear because they are connected to a very stiff girder (the solid wall panel) and will further have their maximum moments increased by movement of the points of inflection away from this wall panel and toward the more flexible girders at their lower ends.

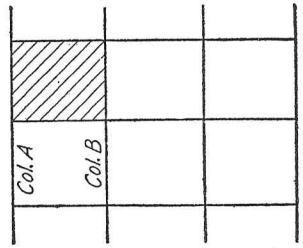

FIG. 29. Combination of Rigid and Flexible Partitions in Building Frame.

It does not appear, however, that any such accidental combination of wall panels which act, with those which do not act can very much increase the girder moments. These girder moments are, however, the more important, since a much larger percentage of the total stress is due to wind in the girders than in the columns.

Exact Analysis by Shear Adjustment. "Exact" analyses of the problem of the moments produced in frameworks by horizontal forces

is perfectly practicable, if by " exact " we mean a solution mathematically consistent with certain assumptions as to physical properties. We must, of course, assume relative values for the moments of inertia; we must define the interaction of the different parts which make up the framework, such as brick or tile or concrete walls and structural framework.

Such an analysis may be made by the following formal procedure:

Consider the structure shown in Fig. 30, subjected to the horizontal forces P' and P''. Assume that all joints are held against rotation but that there are relative horizontal displacements of the different floors due to certain assumed shears in the stories.

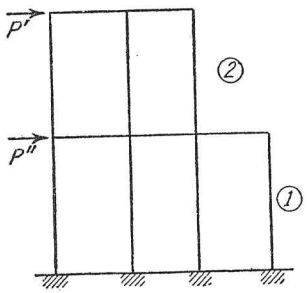

FIG. 30

Compute the fixed-end moments in all columns for these shears; distribute them. From the moments finally determined after distribution, find the shears in each story. Assume as many different combinations of horizontal displacements as there are degrees of freedom of horizontal movement, and for each combination determine a set of shears corresponding to a given set of moments. In the case shown we then have two sets of moments corresponding to two sets of shears in the stories. Call these sets A and B. We now know that moments A correspond to shears

H_1^a in the first story
H_2^a in the second story,

and that moments B correspond to shears

H_1^b in the first story
H_2^b in the second story.

But the true shears are known, and we must combine these sets of moments so as to give the true shears. Therefore write

$$xH_1^a + yH_1^b = P' + P''$$
$$xH_2^a + yH_2^b = P'$$

Find x and y.

The true moments are $xM_a + yM_b$ in any member.

Exact Analysis of Wind Stresses. A much more convenient method of analysis is explained below. Keep in mind the controlling conditions. Statics requires that the total shear in all columns of any story equal the known shear produced by the wind in that story and that the moments balance at any joint. Continuity requires that the deflection be the same in all columns of a story unless there is torsion of the building frame as discussed later, and that the same rotation occur at the ends of all members meeting at a joint.

At any joint of the frame the moments due to rotation are proportional to K/C (see page 117) for the members connecting at that joint. In any story the column moments produced by relative displacement of the two floors bounding that story, without rotation of joints, are equal to the shears in these columns times half the story height, and the shears are proportional to K/L^2 for equal deflections or proportional to I or K where L is the same for all columns.

The moments in the girders are produced only by the joint rotations; but the moments in the columns are a result partly of rotations, partly of displacements. The total of the end moments in the columns, however, is always equal to the total shear in the story multiplied by the story height.

We may start by assuming no moments in the girders and hence no rotations of the joints, write end moments in the columns corresponding to the total shear and proportional to K/L^2. Now distribute the unbalanced moments and carry over as usual. The total column moments will no longer account for the total story shear, and additional end moments should be thrown into the columns to balance the story shear. Distribute and carry over moments again, again adjust the shears and continue to any desired accuracy.

The labor of computation can be much reduced by assuming that rotations of the joints take place at the same time that relative displacement of the floors occurs. It is convenient to make these rotations the same at all joints. In this way it is possible to nearly balance most of the joints before any distribution of unbalanced moments is made. Hence it is possible to guess at a solution of the problem and then proceed to revise this guess, a very valuable characteristic of any method of analysis.

For simplicity consider the case in which all joint rotations are assumed the same in value and in sign. If the members are of uniform section, this will produce at the ends of the members moments proportional to the I/L values with points of inflection at midpoints. We may now produce such differences of displacements of the floors, without further joint rotations, as will give the total story moment at the ends of the columns. The points of inflection are at midpoints for these displacements also. It is not then necessary to compute the moments in the columns due to the rotations, because those due to the displacements may have any desired values and the total is determined by the total story moment.

If, then, all joints in the frame may be rotated (no joints are fixed) we may begin our analysis with end moments in the columns to supply the necessary story moments and with arbitrary balancing moments at the ends of the girders proportional to the I/L value of the girders.

From this point we proceed to distribute unbalanced moments and to carry over. Now adjust the end moments in the columns to maintain the total story moments and add arbitrarily end moments in the girders proportional to their I/L values. The process may be repeated to any degree of precision.

Fig. 31 shows the analysis by the above method of the lower stories of a 20-story, three-aisle building.* We first write the fixed-end moments in the columns to balance the shears, then add arbitrary girder moments proportional to the K values of the girders and of such value as to approximately balance the column moments. In this case the girder moments have been taken, for convenience, equal numerically to $K/2$.

Since the bases of the columns in the lowest story are fixed and cannot have the rotation arbitrarily assigned to the other joints, it is necessary to compute the end moments in these columns due to rotations of the joints at the tops by modifying their K values. The value $1/C$ is $3/2$ for members with equal and opposite end rotations and 1 for members fixed at the far end. If then by rotation of the joints at the ends of girder $AB(I/L = 30.5)$ we produce end moments of -15.2, this same rotation will produce in these columns $(I/L = 25.8)$ end moments proportional to the K/C values of column and girder, or $\frac{25.8}{30.5 \times \frac{3}{2}} 15.2 =$ 8.6 at the top and half as much, 4.3 at the bottom. Then add fixed-end moments in these columns to provide the desired story moments, as shown in the figure. This gives a total moment of $(12.9 \times 2) + 84.8$ which must be supplied in these columns by displacement of the floor, one-fourth of which goes to each end of each column.

In this case only one distribution is needed. Only the moments carried over are shown, the final distribution being made at the end. The moments lost in the columns by distribution which should be added to adjust for shears, are the distributed moments plus the moments carried over, or three times the sum of the moments carried over. Hence we adjust the shears by adding at the ends of the columns moments of which the total equals three times the sum of moments carried over in the columns and which are proportional to the K values for the columns.

* The data for the figure are taken from "Wind Stresses in the Steel Frames of Office Buildings," Wilson and Maney, Bul. 80, Univ. Ill., Eng. Exp. Sta.

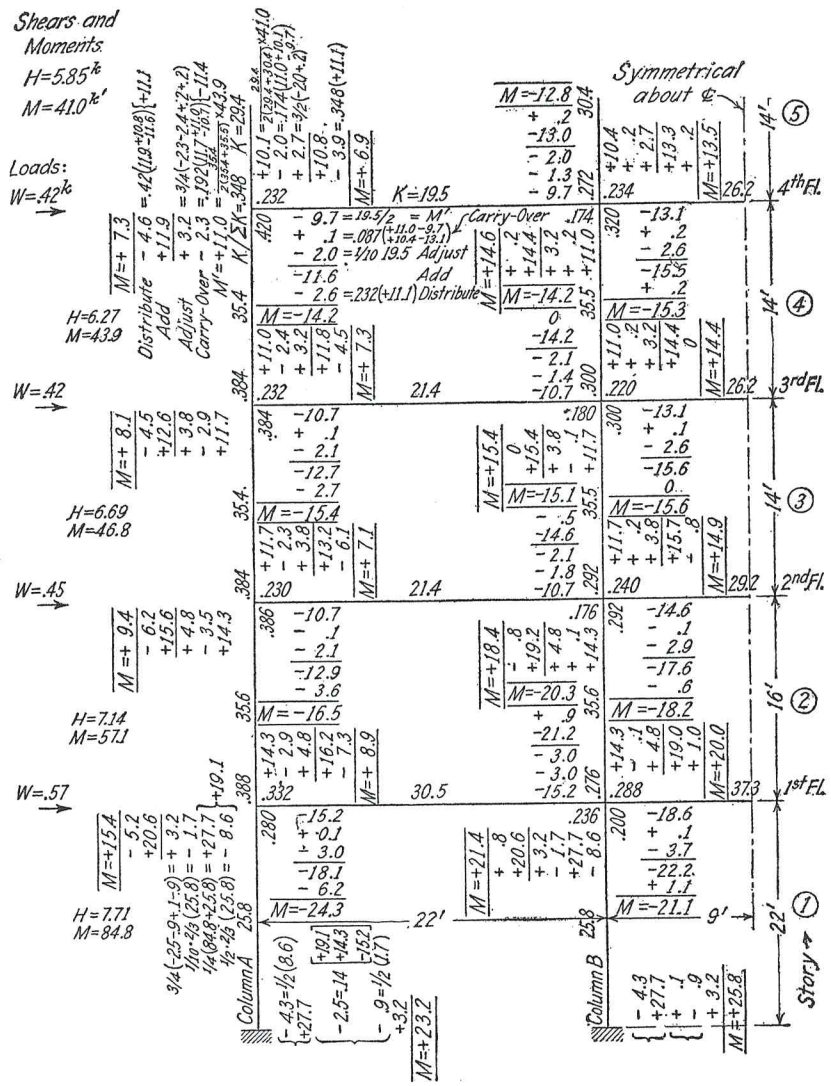

Fig. 31. "Exact" Analysis of Wind Stresses — Shear and Moment Distribution.

The convention of signs for statical moments is used throughout. The moment carried over then is of opposite sign to the unbalanced moment at a joint, and the unbalanced moment at a joint equals the algebraic sum of all moments at the joint. Otherwise the signs used have no significance, since the wind may blow in either direction.

Too great significance should not be attached to the rapid convergence of values in this case. The building is perfectly regular, and great variation from the values given by approximate analysis is scarcely possible.

Any analysis of wind frames by this method may be checked by assuming in the first place the total fixed-end moments which have been thrown into the columns during the analysis, and no moments in the girders. Now proceed in routine fashion with moment distribution. If, in the end, the moments are as previously found, the solution is correct, for we have balanced joints and preserved continuity throughout, and the shears will also balance.

Details of Computation — Fig. 31. The actual numerical calculations are indicated in detail on the figure. The procedure is as follows:

(1) First write the wind load at each floor. In this case 30 lb. per sq. ft. was assumed on a 1-ft. vertical strip of wall surface. At the first floor, the height of this strip to mid-story above and below is 19 ft. and $W = 19 \times 30 = 0.57^k$. The other wind loads follow in like manner and the shears by addition from above. Write the story moments by multiplying the shear at midpoint of story by the story height. In the first story

$$M = 7.71 \times 11 = 84.8^{k'}$$

to be taken by columns on one side of the center line of the building.

(2) Write the relative $K(= I/L)$ values on girders and columns and the $K/(\sum K)$ values at the joints. At the A column joint on the fourth floor:

$$\text{For the upper column } \frac{K}{\sum K} = \frac{29.4}{29.4 + 35.4 + 19.5} = 0.348$$

The other distribution factors at that joint are 0.420 in the lower column and 0.232 in the girder.

(3) Write the fixed-end moments in the columns necessary to balance the shears. In the fifth story the total moment is $41.0^{k'}$ to be distributed between two columns in proportion to their K values, $+10.1$ going to the A column and $+10.4$ to the B column. In the fourth story the moment in the A column is $+11.0$ and in the B column practically the same. The distribution in the lower story is treated separately.

In all cases the fixed-end moments in the girders are written arbitrarily for convenience as equal numerically to the $K/2$ value of the girder. Thus $19.5/2 = -9.7$ in the outside bay at the fourth floor and $-26.2/2 = -13.1$ in the center bay.

(4) Distribute the unbalanced moments at each joint, but for convenience write only the portion carried over to the other end of the rotating member. Moments are carried to joint A on the fourth floor by the rotation of joint A on the third floor, by joint A on the fifth floor and by joint B on the fourth floor. The carry-over ratio is 1/2 the value of $K/(\sum K)$ at the rotating end. In the order mentioned, these are 0.192, 0.174 (the fifth floor is assumed the same as the fourth floor as an approximation in this case) and 0.087, giving as carry-over moments at joint A -2.3 and -2.0 in the columns and $+0.1$ in the girder. The carry-over moments at the other joints follow in like manner, except in the lowest story, which is treated separately.

(5) Adjust the column moments for the unbalanced story shear due to the previous distribution. These are three times the total carry-over moment in any story, and since the K values of the columns in any story are so nearly equal, approximately one-fourth of this total, of opposite sign, goes to each column. In the fourth story the adjusting moment at each end of each column is accordingly $+3.2$ and in the fifth story approximately $+2.7$ (assuming in this case fifth-floor moments the same as those at the fourth floor).

Adjusting moments in the girders are added arbitrarily, so long as they are proportional to the relative K values of the girders — in this case 1/10 K numerically is about right, giving at the fourth floor -2.0 in the end bay and -2.6 in the center bay.

(6) Neglecting further adjustment, we now add all moments at the joints, distribute, and find total moments.

(7) The lower-story columns are fixed-ended, and the distribution of moments is best treated separately as explained in the text above and as shown on the diagram.*

* From the method shown here it is easy to proceed to the general theory of arbitrary deformations as applied to building frames. If we can make a fair approximation of the values of the end moments in the girders, we can set up from these a set of moments throughout the frame which satisfies continuity and which also provides the required shear in each story.

Moments in the girders are due entirely to rotation of the joints. If then we are given the end moments we can compute the end rotations as proportional to $\frac{M_a - \frac{1}{2}M_b}{K}$. This may require some juggling of the ϕ values on any one floor, since the girder must remain continuous, but there is no objection to this since we are only seeking an approximate set of values consistent with continuity.

We now have values for the rotations at the ends of the columns and from these

Deflection of Building Frames. The deflection of building frames is due in part to the flexure of the columns and in part to the flexure of the girders. One of the most valuable features of the method of analysis indicated above is that the total fixed-end moments thrown into any column during the analysis is a measure of the deflection in that story.

Thus, considering the building shown in Fig. 31, in the second story we throw into the wall column at each end,

$$\tfrac{1}{2}\,35.6 = 17.8 \text{ due to rotation of joint (not shown in the figure)}$$

$$\left.\begin{array}{r} 14.3 \\ \underline{4.8} \\ 36.9 \end{array}\right\} \text{ to adjust the shears.}$$

If there were no rotation of the joints due to flexure of the girders, this moment would be 14.3. Hence

$$\frac{14.3}{36.9} = 39\% \text{ of the deflection is due to the column flexure}$$

$$\frac{61\%}{100\%} \text{ of the deflection is due to the girder flexure.}$$

The total deflection in this story is

$$\frac{1}{6}\frac{ML^2}{EI} = \frac{1}{6}\frac{ML}{EK}$$

where $M = 36.9$ foot-kips.

In this case the girders are the element contributing most to deflection. That this is usually the case is an important consideration in discussing vibrations produced by wind.

Earthquake Stresses. Stresses produced by earthquakes are usually computed as if produced by an assumed wind pressure, a given percentage of the mass of each floor being assumed to act in a horizontal direction. This results, however, in an important difference in the stresses produced by wind and those found for earthquakes, because in the case of wind the stresses decrease as the number of columns in a tier increases, but the stresses due to earthquake are nearly independent of the number of aisles in the building.

This treatment of earthquake forces is certainly inadequate since the acceleration is obviously not the same at all floors at any given instant. The theory of structural mechanics is quite adequate to a solution of the problem when, if ever, any dependable data are available as to the accelerations at the foundations.

Torsion in Building Frames Due to Wind. If a building is unsymmetrical about the line of action of the wind, it will presumably twist somewhat under the wind load. If we can determine the relative horizontal deflection of two ends of a column for a unit shear in that column, it is nearly* mathematically correct to treat the reciprocals of these deflections as if they were beam fibers acting on center lines of columns.

Let S be the relative stiffness of any column as measured by the reciprocal of horizontal deflection just explained.

Also let

H be the shear in any column.
W the total wind shear.
c the distance normal to the direction of the wind from the center of any column to the centroid of the S values.
Wd the moment of wind pressure about this centroid.

Then

$$H = S\left[\frac{W}{\Sigma S} \pm \frac{W\,dc}{\Sigma Sc^2}\right]$$

which corresponds to the common formula

$$f = \frac{P}{A} \pm \frac{Mc}{I} \text{ for beams.}\dagger$$

Secondary Effects of Vertical Distortion of Columns. All approximate analyses, such as the method presented above, and all "exact" analyses that have been published neglect wholly the secondary effects

we can compute the moments in the columns due to rotation as $4/3K(\phi_a + 1/2\phi_b)$.

Now add column moments as required to provide the known shears in each story. We can then see to what extent each joint is unbalanced and, if greater accuracy is desired, we may either:

(a) Proceed to an exact solution by successive balancing of moments and of shears.
(b) Revise our estimate of the girder moments to secure a better balance of joints.

If the joints are badly unbalanced we should try to revise the balance (b) before using successive approximation (a).

The method of arbitrary deformations just outlined is perhaps not worth while except in very irregular cases. It has great value, however, in training the judgment as to the approximate values of the moments due to wind.

* This assumes no distortion of the floor in plan, which must be nearly correct if it is of concrete. The expression given is correct, then, if we neglect the torsional moment of the shears produced in the columns in a direction normal to that of the wind.

† Or we may measure c radially and use the polar value of I. The refinement is probably not justified. An exact solution may, of course, be made by the procedure indicated above.

of the vertical distortion of the columns. Thus, in the approximate analysis indicated above, the direct load due to wind will be zero in all interior columns. The wall columns, then, will lengthen on the windward side and will shorten on the leeward side, whereas the adjacent interior columns will not change in length. This means that all girders connecting these columns are bent by this differential elongation, which may theoretically amount, in very high buildings, to 1/4 in. or more at the roof level.

It is well to recognize this fact. Of course, any attempt to determine the stresses produced encounters the difficulties attaching always to determination of stress in beams of reinforced concrete for given distortions. If one can overlook these, the stresses in the girders of the upper floors may be determined. Note, however, that these stresses are not great in the lower stories where the primary stresses due to wind are large. Of course, stress in the upper girders transfers some direct wind load from one row of columns to another, but the amount thus transferred is not large.

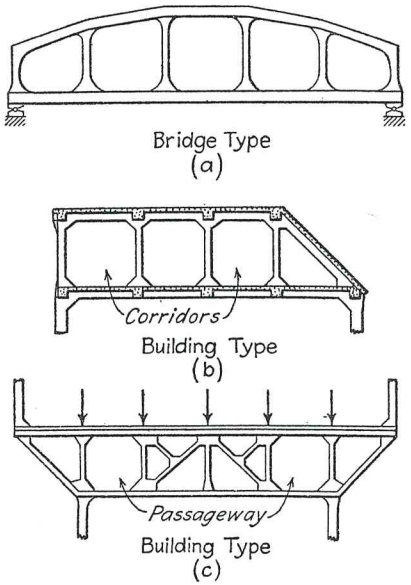

Fig. 32. Open-web Girders.

Vierendeel Girders. Bridge structures of the type shown in Fig. 32 (*a*) have been built to a considerable extent in Belgium and in the Belgian Congo. They have also been used elsewhere in Europe. Such frames are known as quadrangular girders, open-web girders or trusses, or Vierendeel girders, after Professor Vierendeel, of the University of Louvain.

Economy and rigidity are claimed for these structures when built in steel. Any economy that has been realized in such cases seems to be based on the practice of increasing the allowable stress over that used for primary stresses in ordinary steel trusses on the ground that the ordinary truss has secondary stresses in addition to the primary stresses. However, most bridge engineers in America would hesitate to consider the secondary stresses in an ordinary riveted truss of importance equal to the primary bending stresses in a Vierendeel truss.

The term "rigidity" represents a property which is ill defined but is usually represented as very desirable. If deflection is meant, it seems evident that the Vierendeel girder is much less rigid. As regards the types of vibration of the two structures, no comparative dynamic analyses are available, although such comparisons are possible.

The problem of stress analysis in the Vierendeel girder with parallel chords is quite similar to that for wind stresses. The methods explained above are available, either for approximate or for exact analysis.

If the upper chord is polygonal, approximate analyses are still convenient. The technique of exact analysis differs slightly, however,

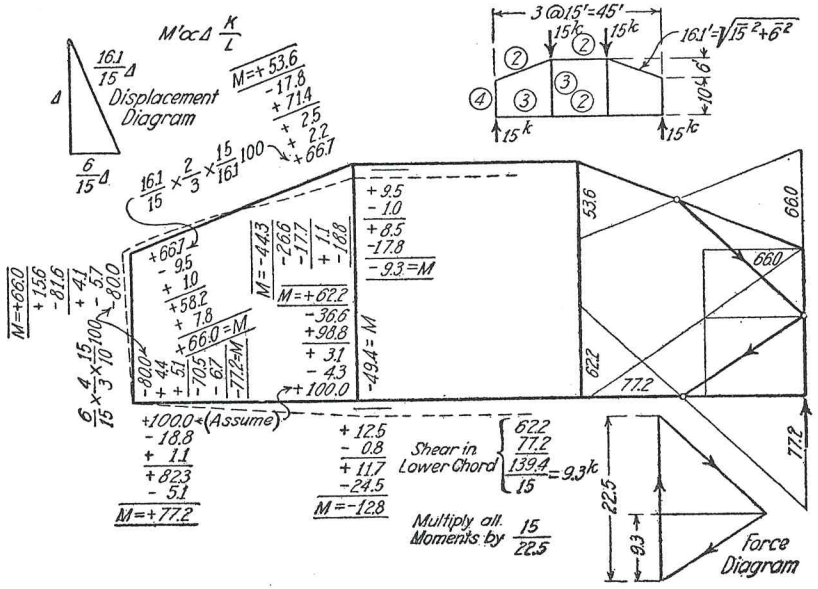

Fig. 33. Open-web Girder — Symmetrical Loading.

because the quadrangles are no longer rectangular, and hence deformation in one direction only for shear adjustments is not possible. We must then study for each panel which is not rectangular the geometry of deformation and the statics of shear. The problem is very interesting but does not seem of enough importance to warrant a full discussion. To one fully familiar with the geometry of deformation the problem need not be very difficult.

Fig. 32 shows possible applications of the Vierendeel truss. In the figure, (*a*) is the type commonly used for bridges and (*b*) and (*c*) show types which have possible applications in building construction.

Fig. 33 shows the analysis of a Vierendeel truss for symmetrical loading. Assume some fixed-end moment in the lower chord produced by the deformation shown by the dotted lines. Compute the corresponding fixed-end moment in other members; distribute. Compute the shear in the end panel; in this problem this shear has been found by a simple and reasonably obvious graphical construction. The moments due to the given loads may now be found by proportion. Shears and thrusts follow by statics.

In the calculations shown, only the moments carried over are written each time. These are then added to the original fixed-end moments, and the total unbalanced moment is distributed at the end of the solution.

E. Secondary Stresses in Trusses

Trusses of Reinforced Concrete. Trusses are sometimes built of reinforced concrete. In such structures what are commonly called secondary stresses in the case of riveted steel trusses usually become important. The analysis for these secondary stresses furnishes an excellent illustration of the determination of the effect of axial stresses — change of shape of the structure — upon bending stresses.

The method of moment distribution gives an especially illuminating picture of the origin and nature of such stresses. The primary (axial) stresses in the members of the truss produce relative transverse displacements of the ends of the members. If, during the deflection, the joints of the truss were held so that they could not rotate, these transverse displacements would set up fixed-end moments in the members. These end moments at each joint may then be adjusted by moment distribution to provide for the release of the joints. We thus get the end moments in the members due to the deflection of the truss, and from these the secondary stresses may be found.

The indicated order of procedure may be summarized as follows:

(*a*) Determine relative transverse displacements in members due to deflections resulting from primary stresses.
(*b*) Compute fixed-end moments thus produced.
(*c*) Distribute unbalanced fixed-end moments.
(*d*) Compute secondary stresses from total end moments.

Computation of Transverse Displacements. The transverse displacements of the ends of the members may be taken from a Williot diagram or they may be computed from formulas. The construction of the Williot diagram is explained in most text-books on steel design.

Note that in this case the Mohr rotation diagram is not needed; it is

the relative displacement of panel points at opposite ends of the members that is wanted and not the absolute displacement of these points.

It is about as rapid to get all angle changes from the following general formula, easily deduced from geometry:*

$$E\Delta\alpha = [af_a - (a_b f_b + a_c f_c)]\frac{1}{r}$$

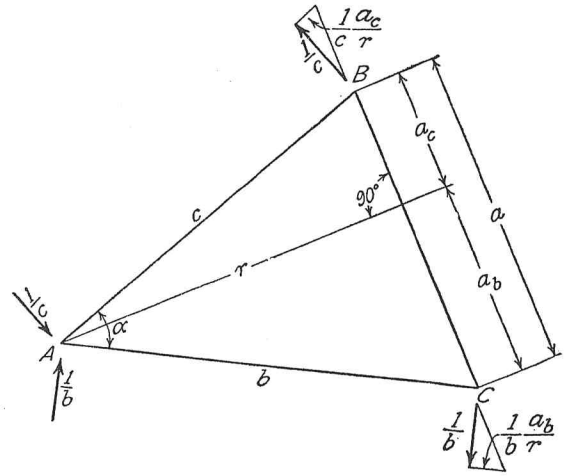

FIG. 34. Secondary Stresses — Angle Change in a Triangle.

* Apply at A and C, Fig. 34, the elements of a unit couple, causing reactions such as to hold AB fixed in direction. Tension and increase of angle are taken as positive.

Then, by the principle of virtual work, page 77:

$$\Delta\alpha = \sum \delta u = \sum \frac{fL}{E} u$$

where f is the average existing unit stress on the gross section of the member of length L.

u is the unit stress in the member set up by the imaginary unit couple.

Resolving the forces at joints B and C:

$$u_a = \frac{1}{r} \qquad u_b = -\frac{1}{b}\frac{a_b}{r} \qquad u_c = -\frac{1}{c}\frac{a_c}{r}$$

$$E\Delta\alpha = f_a a\frac{1}{r} - f_b b\frac{1}{b}\frac{a_b}{r} - f_c c\frac{1}{c}\frac{a_c}{r}$$

$$= f_a\frac{a}{r} - f_b\frac{a_b}{r} - f_c\frac{a_c}{r}$$

where E is the modulus of elasticity.

f_a, f_b, f_c are axial unit stresses in the corresponding members a, b, c.

When all the angle changes are known, the angular rotations of all members may be found by addition with reference to any one member considered as fixed.

Similar relations are easily written for the angle changes that occur in the quadrilateral of a subdivided truss or the four-segment triangle of a K-truss.

Fixed-end Moments. Signs for Secondary Stresses. By the column analogy, relative transverse displacement of the ends of a bar, when the end joints are held against rotation, may be considered as a moment about a centroidal axis on the analogous column. Then, referring to Fig. 35

$$M_a' = \frac{\Delta}{I_0} x_a = \psi \frac{x_a}{I_0} L$$

$$M_b' = \frac{\Delta}{I_0} x_b = \psi \frac{x_b}{I_0} L$$

If the section is constant, these values become

$$M_a' = \psi \frac{\frac{L}{2}}{\frac{1}{12}\frac{L^3}{EI}} L = 6EK\psi = M_b'$$

Since rotations are involved in this analysis and in general full curves of bending moment are not wanted, it will be convenient to use the convention of signs for statical moments. The end moment in a member,

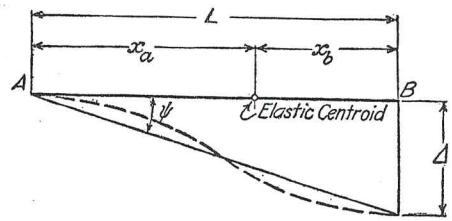

FIG. 35

then, will be taken as positive if the moment tends to turn the joint in a clockwise direction. For positive ψ, then, both end moments are positive.

Effect of Proportions on Secondary Stresses. It is of importance, both in considering the probability of high secondary stresses and also in computing them, to understand how the proportions of the structure enter into the problem.

The relative transverse displacements of the ends of the members vary directly with the unit stresses f, directly with the lengths of the members L, inversely with E. They also depend on the shapes of the triangles of the truss.

The fixed-end moments in any member vary directly with Δ, directly with I, directly with E, inversely as L^2.

The distribution of moments depends only on the relative I/L values.

The secondary stress in a member varies directly with the secondary moment, directly with depth, inversely with I.

From these relations we conclude that the percentage of secondary stress depends only on the relative fiber stresses in the members, on the depth/length ratios of the members, on the relative values of I/L (relative stiffness) and on the shapes of the triangles. It does not depend either on the absolute fiber stresses or on E, if this is the same throughout the structure, or on the size of the truss. This is very important because it permits the comparison of trusses of the same type but of different spans and also makes possible estimates of secondary stresses in the trusses sometimes built of concrete from data computed for steel trusses. The results then are in terms of the basic working stress and will vary directly with the absolute values of d/L.

It is very important to realize that generally no one wants, or at least that no one should want, a complete set of exact values for secondary stresses. What we want to know, as quickly as possible, is whether they are too high; as soon as it is clear that they are too high, we at once do something to reduce them. What is to be done depends on circumstances, and it is not intended here to discuss the matter at length; we may redesign so as to reduce the d/L ratios of the overstressed members, or in structures of steel we may plan to use some erection expedient to set up bending stresses opposite in sign to the secondary stresses, or we may reduce the basic stresses.

These considerations also largely simplify the computations. The proper measure of secondary stress is not the absolute value nor the percentage of primary stress in the member, but the percentage of basic unit working stress. If we use this measure, a 25% secondary stress will mean $0.25 \times 18{,}000 = 4500$ lb. per sq. in. designed for a basic stress of 18,000 lb. per sq. in. in a steel truss, and $0.25 \times 800 = 200$ lb. per sq. in. designed for a basic stress of 800 lb. per sq. in. in a truss of reinforced concrete. We may, then, use a unit height for the truss, or a unit height at center if the chord is polygonal, express all axial stresses in terms of the basic working stress, write only relative values of $K(= I/L)$ for the bars. In computing the secondary stresses from the secondary moments we use a section modulus

$$S = \frac{I}{c} = \frac{I}{d/2} = 2\frac{I/L}{d/L} = 2\frac{K}{d/L} \text{ for members of symmetrical cross-section.}$$

In any one member it thus makes no difference what value is assumed for K provided the relative values of K are correct, since I enters directly into the computation of moments and inversely into the computation of stresses. From previous observations in moment distribution

we know that within reasonable limits the relative values of K need not be very exact.

Abbreviated Computation. For a complete analysis of secondary stresses, then, we need to know only

(*a*) The fiber stresses in terms of the basic unit stress.
(*b*) The shape of the truss, but not its size.
(*c*) The d/L ratios for the bars.
(*d*) The relative K values, which may be conveniently got from

$$K = \frac{I}{L} = \frac{A(nd)^2}{L} = A\left(n\frac{d}{L}\right)^2 L$$

where A is the gross area of the bar,

n is the ratio of radius of gyration to depth, approximate values of which are tabulated for steel sections in nearly all handbooks.

If the basic unit stress is taken as 100, instead of unity, the secondary stresses will be percentages of the basic unit stress.

The procedure just outlined is simple and has the advantage that at any stage of the process it is possible to sum the results and mentally estimate the stress intensities with which we are dealing. The procedure here and in other cases of moment distribution may be abbreviated by omitting the distribution each time, performing one distribution only at the end of the process. We thus carry over each time without distributing, thereby saving some figuring.

Effect of Secondary Stresses on Primary Stresses. In steel trusses of ordinary proportions the secondary stresses have a negligible effect on the primary stresses. The secondaries, then, are objectionable but do no work. But in trusses with short stubby members (large d/L values) the secondary stresses may materially reduce the primary stresses. In some heavy building trusses computations indicate that the secondary stresses may even reverse the stress in some light members.

The effect of secondaries on primaries is quite likely to be appreciable in trusses of reinforced concrete. The obvious procedure is to first compute the secondaries, then revise the primaries by statics and repeat to sufficient exactness.

Illustrative Problem — Fig. 36. The determination of secondary stresses by moment distribution is illustrated in Fig. 36. The proportions of the truss — relative dimensions, relative K values — are first written, as are also the fiber stresses on the gross sections in percentage of the unit working stress.

Next compute the angle changes. The values are written opposite each angle. Then, starting with some bar of small rotation and calling

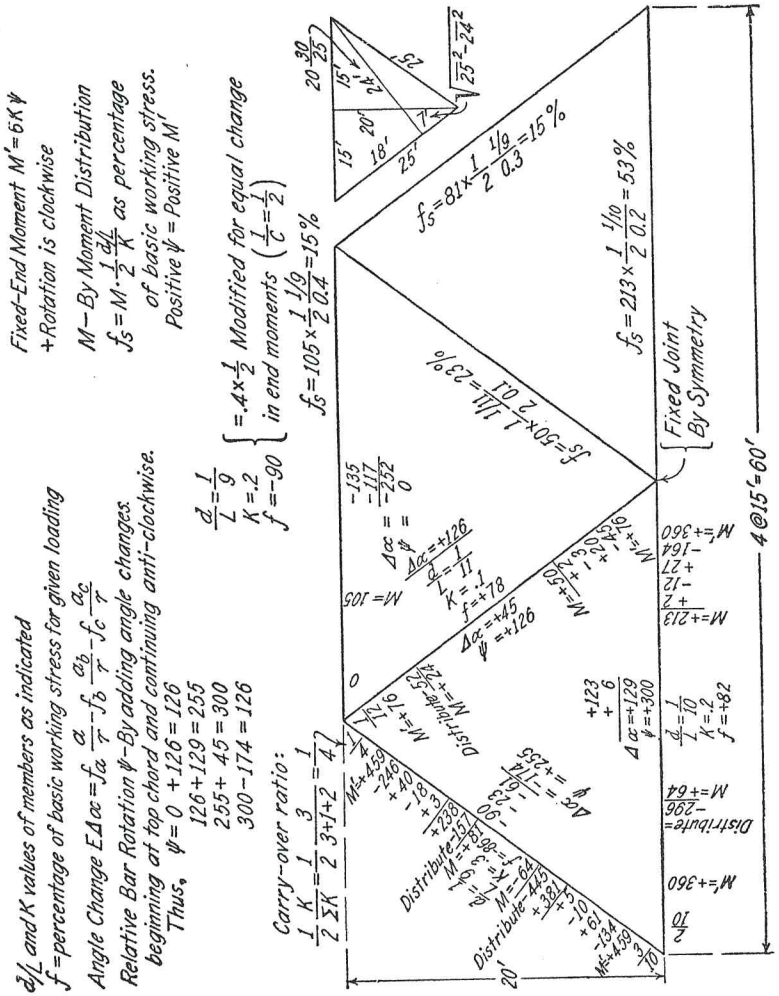

FIG. 36. Secondary Stresses.

its rotation zero,* determine, by adding angle changes, the rotation of all other bars. If we use the usual convention (tension positive) for fiber stresses, and pass around the truss in an anti-clockwise direction, all angle changes will be added algebraically. Sign will then be automatic. Positive rotation is clockwise.

Now write fixed-end moments, $6K\psi$, and proceed as usual in moment distribution. In this case the distributed moments are omitted at each step, only the moments carried over being written and all distribution made at the end of the process. As elsewhere, where rotations are involved, we use the clockwise convention for end moments. Hence positive ψ produces positive end moment; we reverse the sign of the total unbalanced moment in distributing and carry over with the same sign as the distributed moment. This is equivalent to carrying over with sign opposite to the total unbalanced moment. In this problem the K value for the top chord has been modified because of symmetry. The middle joint in the lower chord evidently does not rotate.

After the end moments have been found, the secondary stresses are computed by multiplying by $\frac{d}{2I} = \frac{1}{2}\frac{d/L}{I/L} = \frac{1}{2}\frac{d/L}{K}$ for each bar. The results are in percentage of the basic unit stress.†

F. "Rigid-frame" Bridges

Bridges of the types illustrated by Fig. 13, page 211, have been used in recent years for highway over-crossings and sometimes for railway bridges.

In bridges of this type, the abutments are an integral part of the bridge structure, moments being produced in the abutments by the loads on the girders. Clearly the magnitude of the earth pressure is variable, since it may be zero — backfill standing vertical and clear of the abutment as the girder contracts with a fall in temperature — or it may equal the active pressure under the normal condition of full pressure of the earth against a fixed wall, or it may have values between the active pressure and the passive pressure where the bridge tries to expand against an active backfill.

As in all bents, uncertainties arise from foundation distortions. The footings may be fixed or they may be nearly free to rotate or one may be

* In this problem the rotation of the top chord due to the deflection of the truss is actually zero by inspection.

† Some work would have been saved by using fixed-end moments equal to $K\psi$ and multiplying by $3\frac{d/L}{K}$ to find fiber stresses.

fixed and the other free; in some circumstances the possibility of horizontal displacements of the footings should also be considered.

A treatment of all these possibilities would carry us far afield. In spite of the physical uncertainties and the large elements of engineering judgment involved in such designs, they seem to have been satisfactory structurally and have been distinguished for architectural dignity.*

Under the various assumptions just indicated, the structure shown in Fig. 13 may be looked at as:

(*a*) A two-hinged arch or bent.
(*b*) An arch or bent fixed at ends.
(*c*) An arch or bent pinned at one end, fixed at the other.
(*d*) A bent restrained against sidesway.

Of these the last named is the most important. The structure if symmetrical may certainly be so treated for dead load, for full live load and for change of temperature. Maximum stresses in the abutments and near the ends of the span also occur for the assumption of restrained sidesway.

The heavy short abutments in such structures are so stiff that a very close preliminary design may be made by considering the girder fixed at ends (abutments infinitely stiff). Study of several cases indicated that only a small percentage of the fixed-end moment on the girder was lost by flexure of the abutment.

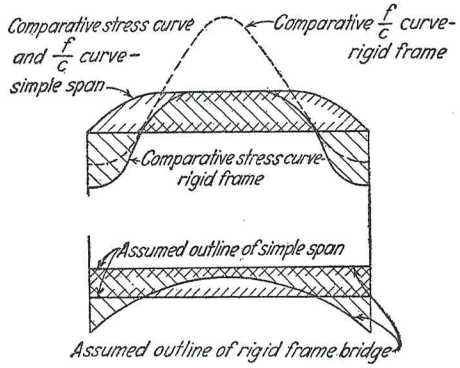

Fig. 37. Comparative f/c Curves — Rigid Frame and Girder Simply Supported.

The economical design of the structure, then, is essentially that of a beam of variable depth fixed at ends, which may then be investigated for various assumptions. In view of the small contribution of the flexure of the abutment to the distortions of the structure, the importance of uncertainties as to earth pressure are largely minimized.

In the shorter spans, moments due to motor trucks may govern near the ends of the girders. Since they are relieved by horizontal motions of the deck, conservatism indicates that the structure should be

* For interesting data on these structures, see "The Rigid Frame Bridge," Arthur G. Hayden, John Wiley & Sons, 1931.

analyzed as a bent restrained against sidesway and not as a free bent or arch.

The claims made for reduced deflections in this type of bridge have not been proved. In the case of steel bridges one would expect the rigid-frame type of bridge to have greater deflection than a simple span on account of the reduced depth at the center — one of the chief advantages claimed for the rigid frame — where depth is most needed to reduce deflection. Fig. 37 presents a comparison of the f curves and f/c curves for assumed proportions of the girders as shown. It is evident that the bending moment due to the f/c curve — which measures the deflection — is greater in the case of the rigid-frame bridge.

See pages 41–43 to appreciate the difficulty of applying such comparisons to structures of reinforced concrete.

CHAPTER VIII

INFLUENCE LINES

What Is an Influence Line? An influence line is a graph or chart showing, for successive positions of a unit load, the value of some direct linear function of the load on the structure. An influence line may be drawn for unit stress in a given fiber, for shear at a given section, for moment about the centroid of any section or for moment about the kern of the section, for one component of the reaction at any support, for one component of the deflection at a given point, or for rotation of any line in the structure. The unit load for which the influence line is drawn is usually vertical, although it may be horizontal or inclined. It may be — but rarely is — a unit couple.

An influence line is a somewhat sophisticated device. If one is accustomed to the use of charts as tools of thought, it is an extremely valuable conception; it is even useful to those who employ charts as a substitute for thought. Influence lines are not essential to the understanding of any structure, either determinate or indeterminate.

Construction of Influence Lines. The most obvious method of drawing influence lines is to move a unit load across the structure and compute the values of the functions under investigation for each position of the load. In some respects this is the best method because it brings out clearly how the structure acts under a moving load; in order to draw an influence line by this method it is necessary to understand clearly the theory of action of the structure. Moreover, if the influence lines are to be drawn accurately to scale, this method is usually as easy as any.

For sketching influence lines quickly, to get their general shape, we use the principle explained on page 79, Chapter III.

> Müller-Breslau's Principle states that if any function — such as fiber stress, reaction, shear, bending moment, torsion — is allowed to produce freely a very small corresponding deformation Δ, the load line of the structure will be deflected by the amount of the influence ordinates for that function multiplied by Δ.

Although it is important to emphasize that this principle depends on the displacements being extremely small, as they are in actual structures, it is not necessary to adhere to this either in sketching the deflected structure or in computing the ordinates. For use, then, we may say that

the influence ordinates are the deflections produced by a unit displacement or rotation. This means that, if we want to draw an influence line for a vertical reaction, we are to imagine that this reaction is raised by one unit; that if we want to draw an influence line for bending moment about the centroidal axis or about the axis through the kern of a cross-section we imagine a unit rotation about a hinge lying along this axis.

Influence Lines for Statically Determinate Beams. Fig. 1 shows typical influence lines for reaction, bending moment, shear and deflection

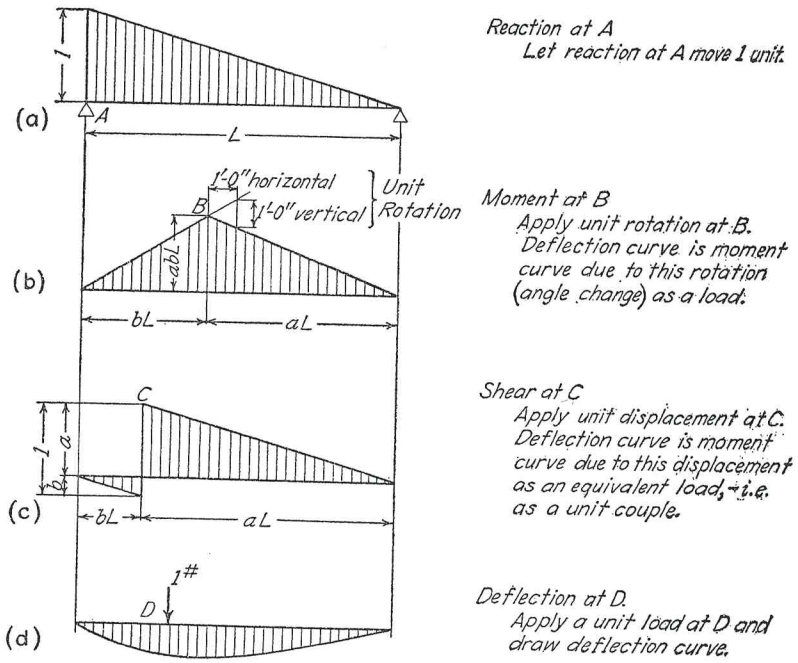

FIG. 1. Influence Lines — Beam Simply Supported.

for a simple beam supported at ends. This is the simplest application of Müller-Breslau's Principle. In order to draw the influence line for reaction at A, Fig. 1 (a), we raise the beam one unit at A and draw the deflected load line. In order to draw the influence line for bending moment at B we imagine a hinge at B, apply a unit rotation at that hinge, and draw the deflected load line, Fig. 1 (b). The influence line for shear at section C is the deflected load line obtained by applying a unit displacement at C, the tangents to the deflected load line at the

section remaining parallel, Fig. 1 (c). To obtain the influence line for deflection at D, Fig. 1 (d), we apply a unit load at D and draw the deflected beam.

Fig. 2 shows examples of influence lines for a cantilever beam, for a simple beam supporting panel loads and for a simple beam with cantilever arms overhanging each support.

Combined Influence Lines. The influence line can usually be built up from simple influence lines with which we are familiar. The scale to which the lines are to be combined is determined either:

(a) by knowing the area under the combined influence line;

(b) by knowing from inspection some ordinate of the combined influence line, or

(c) by computing some ordinate of the combined influence line by the elementary procedure of placing a unit load at that point.

We have given in this chapter several illustrations of this procedure, of which we may here note the following examples:

(a) The influence line for moment at any section of an arch may be drawn by combining the influence line for moment at the corresponding section of a beam with the influence line for moment due to arch thrust. Assuming that we know the shape of both of these curves — they are discussed below — we combine them for a parabolic arch so that the total area is zero, because, in a parabolic arch, if we neglect rib

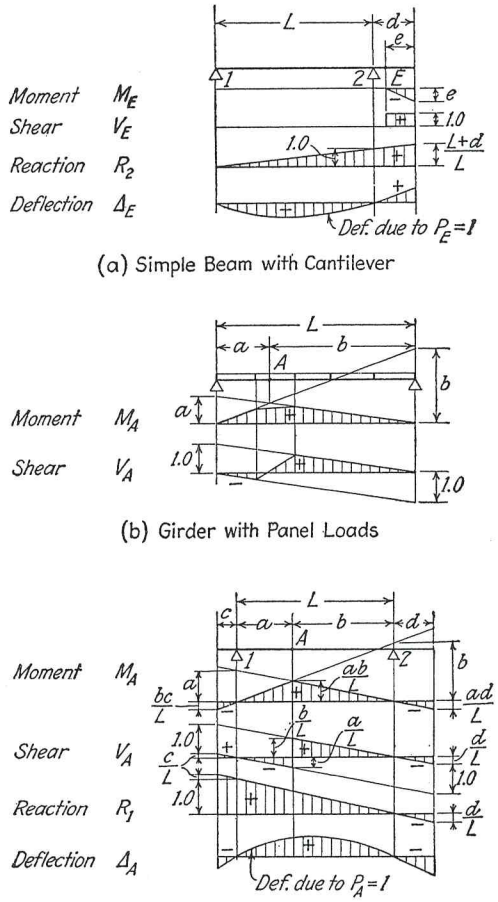

FIG. 2. Influence Lines — Beams Simply Supported.

shortening, there is no moment at any section due to full uniform load. This is discussed further elsewhere. (See Fig. 19, page 265.)

(*b*) The influence line for moment at any section of a beam of two spans may be drawn by combining the influence line for moment if the center support were omitted with the influence line for moment due to

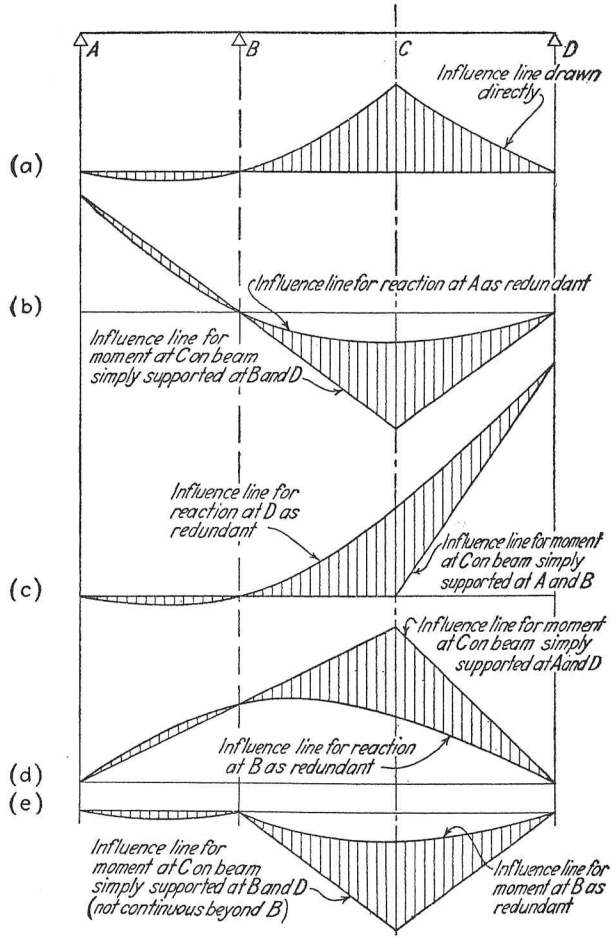

FIG. 3. Influence Lines — Two-Span Beam — Various Bases.

the center reaction. Assuming that we know the shape of the influence line for the reaction, we must combine the influence lines so that the ordinate over the center support is zero, since a load acting at a rigid support produces zero moment at all points on the beam. This is illustrated in Fig. 3 (*d*). Other methods of drawing the influence line

for moment at a given point C in this two-span beam are also shown in Fig. 3. See also the construction shown in Fig. 4 which is self-explanatory.

(*c*) The influence line for bending moment at any section of a continuous beam may be drawn by combining the influence line for moment at that section, if that span were fixed at ends, with the influence line for moment due to rotations of the ends of the span. Independent

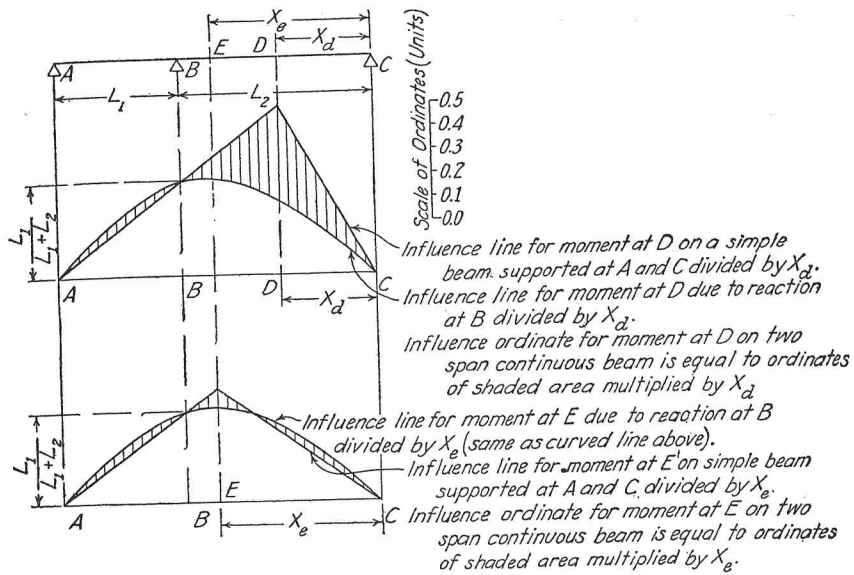

FIG. 4. Influence Lines — Two-Span Beam — Same Base Curve.

computation of one point on the combined influence line will enable us to draw the figure to scale.

If a structure is indeterminate in the second degree — as for example a continuous beam of three spans simply supported at ends — we must combine the influence lines for a determinate structure with two curved influence lines for the indeterminate structure.

The important point is that only a limited number of analyses of the indeterminate structure are needed. All other values may be got from these. This is true of the structure as a whole and also of each part of it. Hence all influence lines for shear or moment in any one span can be got from influence lines for moment at the ends of the beam, and all influence lines for shears or moments or thrusts in any one span of a series of arches can be got from influence lines for end moments and for thrust.

In the beam span AB, Fig. 5, let

i_s = influence ordinate at any point for moment at C on span AB simply supported.
i_a = influence ordinate for bending moment at A.
i_b = influence ordinate for bending moment at B.
i = total influence ordinate for bending moment at C.

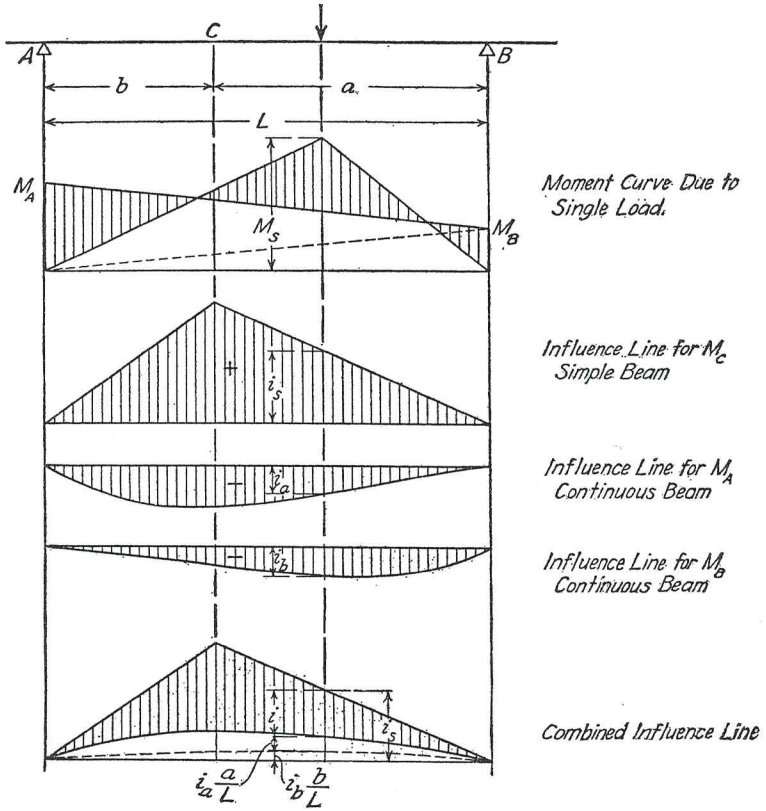

FIG. 5. Influence Lines — Continuous Beam.

Now for a load in any position

Total moment at C = (moment at C on simple beam AB)
$+(a/L) \cdot$ (moment at A)
$+(b/L) \cdot$ (moment at B)

whence

$$i = i_s + \frac{a}{L} i_a + \frac{b}{L} i_b$$

If we wish to draw an influence line for shear at any section,

Total shear at C for any loading = (shear at C on simple beam AB)
$+(M_a - M_b)/L$.

In a symmetrical hingeless arch we may write for any condition of loading (Fig. 6)

$$M_c = M_s + (a/L)M_a + (b/L)M_b + Hy$$

in which

M_c = the bending moment at C, distant a from end B and b from end A of the span.
M_s = the moment which would exist at C if the arch were a simple beam on span AB.
M_a and M_b = the bending moments at A and B respectively.
H = the horizontal thrust acting along the line connecting the ends of the arch and at a vertical distance y from C.

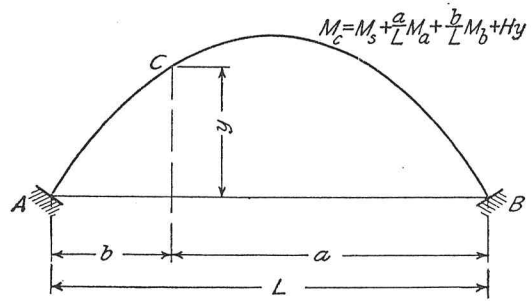

FIG. 6. Moment Relations in An Arch.

Whence

$$i = i_s + \frac{a}{L} i_a + \frac{b}{L} i_b + y i_h$$

in which

i = the total influence ordinate for moment at C.
i_s = the influence ordinate for moment at C on a beam AB simply supported.
i_a = the influence ordinate for bending moment at A on the arch AB.
i_b = the influence ordinate for bending moment at B on the arch AB.
i_h = the influence ordinate for crown thrust in the arch.
y = the distance from C to line connecting the ends of the arch.

The point C may be either on the axis of the arch as determined by the centroids of the cross-sections or it may be at the kern point of a cross-section.

If, in the above expressions, i_a and i_b are influence ordinates for moment at A and B, not on the arch but on a beam fixed at ends, then y should be measured to a horizontal through the elastic centroid of the arch. (See also Fig. 20, page 266.)

If the arch is unsymmetrical, the same relations hold except that the line connecting the ends of the arch axis and the line of thrust for change of span are not horizontal. In this case, however, we may still take y vertically and use only the horizontal component of the thrust.

In all the above expressions positive signs have been used for summation; it is assumed that signs are properly chosen.

Attention should be called to the precision that may sometimes be required in the computations just indicated if precision is expected in the results. Wherever quantities to be added algebraically are nearly equal in value but of opposite sign, a small relative error in one shows as a large relative error in the total.

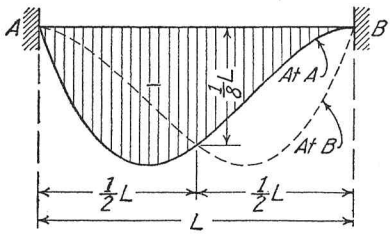

Fig. 7. Influence Lines — Fixed-ended Beam — Uniform Section.

Influence Lines for Beams Fixed at Ends. Fig. 7 shows the influence lines for bending moment at the supports of a beam fixed at both ends. We can sketch directly the shape that the beam will take if we rotate one end. If the beam is of uniform section, the end moment due to a load, P at mid-span is $PL/8$, or all the ordinates may be computed from the equation

$$M_a' = m_s(a/L)$$

See page 61.

Fig. 8 (a) shows a slightly different method for estimating the influence line for end reaction on a beam fixed at both ends. First draw the influence line for reaction on a simple beam by raising that reaction point one unit, and then rotate the ends back to their horizontal position. Fig. 8 (b) shows the influence line for shear obtained from the influence line for reaction.

Fig. 9 shows how this method may be used to draw the influence lines for bending moments at points between supports on a beam fixed at ends. We first draw the influence lines as if the beam were simply supported at the ends, and then rotate the ends to tangency.

Fig. 10 shows typical influence lines for moments on a beam fixed at ends. They are drawn by the elementary procedure of drawing a series of curves of moments for a unit load in various positions and

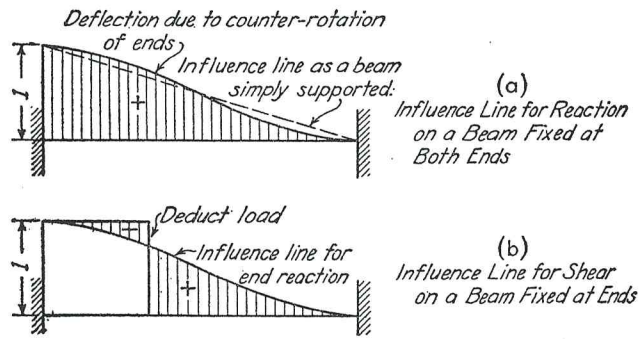

Fig. 8. Influence Lines — Fixed-ended Beam — Uniform Section.

transferring the ordinates of these curves to the influence lines. It is the simplest procedure, and if many influence lines are wanted it is also the easiest. Note the three types of influence line indicated.

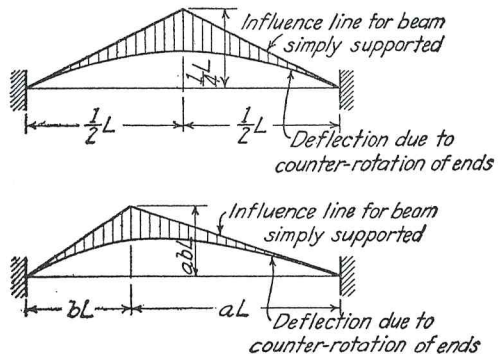

Fig. 9. Influence Lines — Fixed-ended Beam — Uniform Section.

Fig. 11 shows curves of maximum moment for uniform load on a beam of uniform section fixed at ends. In the middle third and also at the ends of the span the values of maxima coincide with the curves of full live loading or of no live loading. In the end thirds of the span the curve of maximum positive moment lies above the moment curve for full live load, and the curve of maximum negative moment lies below the moment curve for full live load. Fig. 11 (a) shows the construction for no dead load, and Fig. 11 (b) for a case where the dead load is equal

in intensity to the live load. Note that always the departure of one curve of maxima from the curve of moments for dead load with no live load must equal the departure of the other curve of maxima from the curve of moments for full live and dead loads.

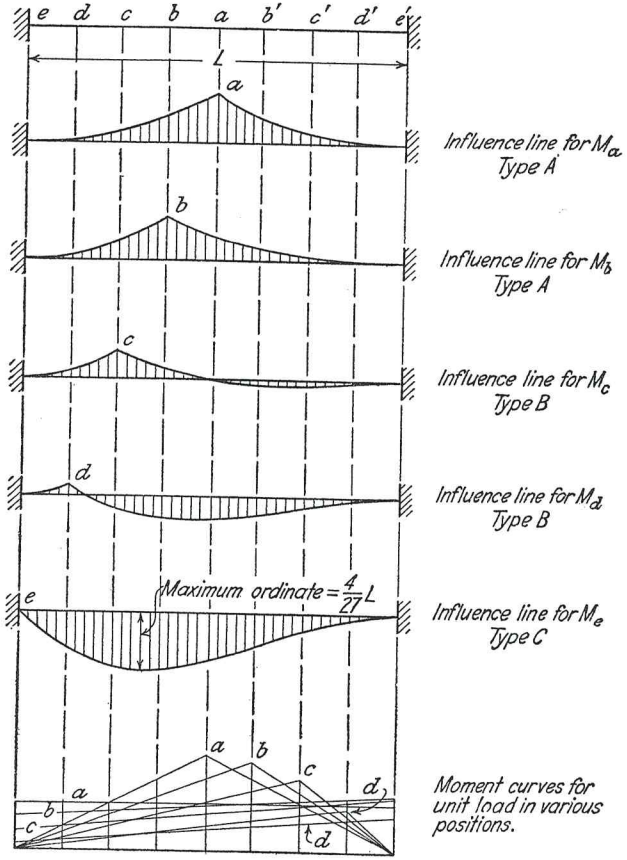

FIG. 10. Influence Lines — Fixed-ended Beam — Uniform Section.

Fig. 12 shows curves of maximum moment for a single moving concentrated load as got from the influence lines of Fig. 10. Compare these curves with those of Fig. 11 (*a*).

Fig. 13 shows typical influence lines for a beam of uniform section fixed at one end and simply supported at the other end. The ordinates of these curves may be computed directly or they may be deduced from influence lines for a beam fixed at both ends by finding the effect of releasing the moment at the end which is simply supported.

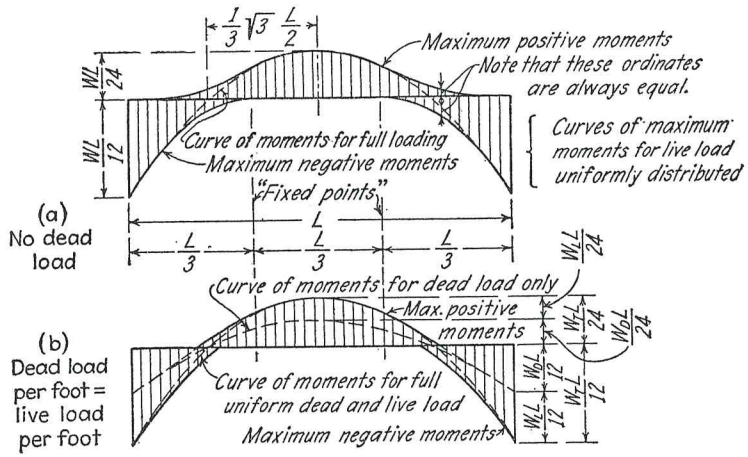

FIG. 11. Curves of Maximum Moments — Fixed-ended Beam — Uniform Loads.

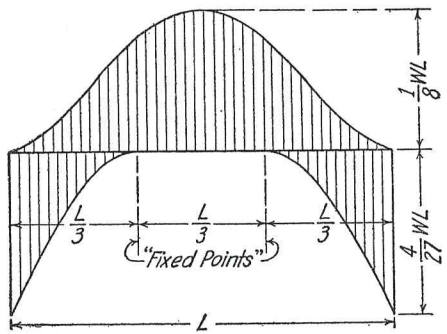

FIG. 12. Curves of Maximum Live-Load Moments — Uniform Section — Single Concentrated Load.

Influence Lines for Haunched Beams. Fig. 14 shows a method of drawing approximate influence lines for end moments on haunched beams. We assume a free (flexible) length of beam, as explained in Chapter V, whose moment of inertia is equal to that of the beam between haunches. The ends of the free length are assumed to be at the sections where the depth of beam and haunch is one-third greater than the depth of beam at mid-span. We may then consider the influence line made up of three parts: the flanking haunches, which do not bend; the deflection due to raising one end of the free length a distance equal to the length of flanking haunch at that end without rotation at either end, and the deflection due to rotating one end of the free length until it is tangent to the haunch.

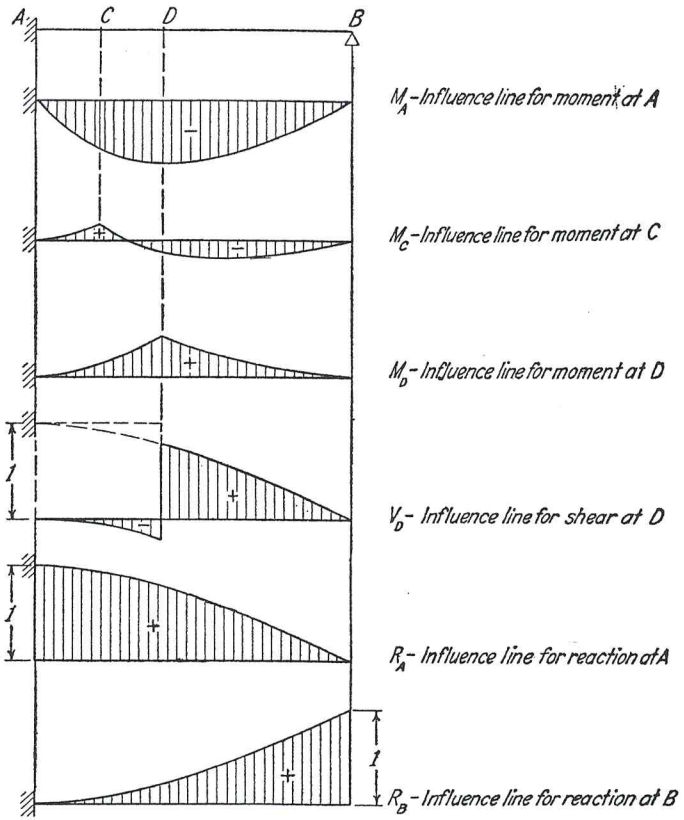

FIG. 13. Influence Lines — Beam of Uniform Section Fixed at One End, Simply Supported at the Other.

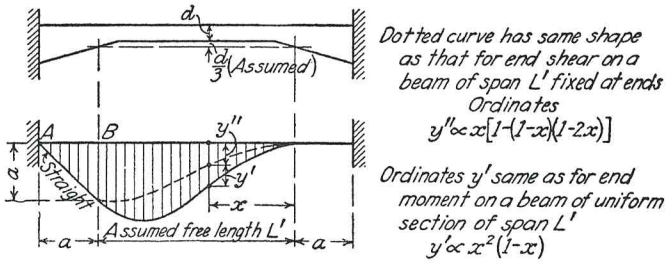

FIG. 14. Influence Lines — Fixed-ended Beam — Section Not Constant.

We obtain these relations by considering the influence line as a purely geometrical construction. Exactly the same relations follow from statics if we note that the moment at A (Fig. 14) due to a load within the free length is equal to the moment at B plus the shear at B times the distance a.

Exact influence lines for haunched beams are shown in Chapter V.

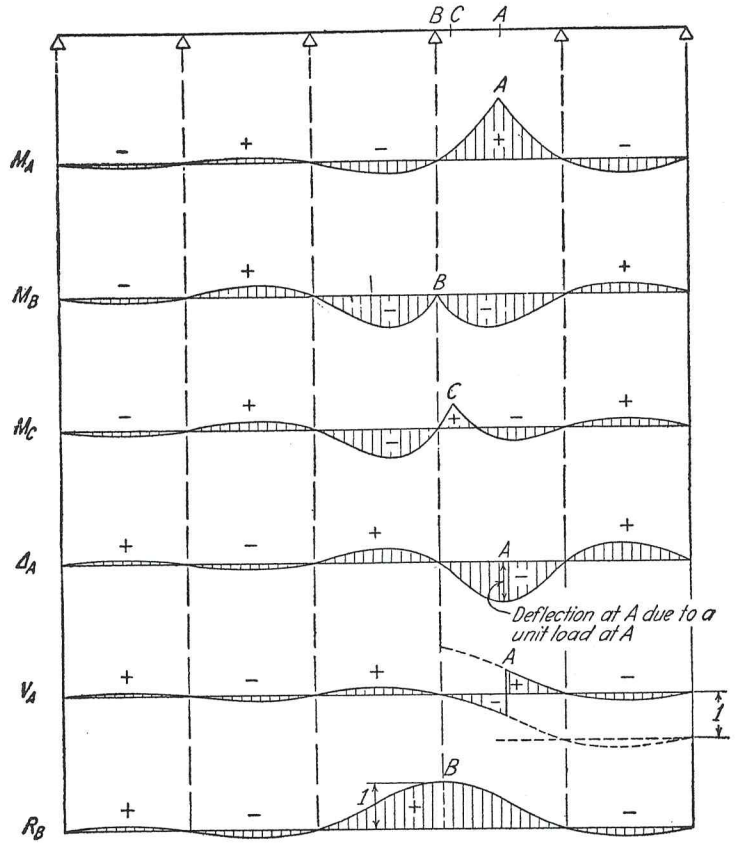

FIG. 15. Typical Influence Lines — Continuous Beams.

Influence Lines for Continuous Beams. Fig. 15 shows typical influence lines for continuous beams. These have been sketched directly, using Müller-Breslau's Principle.

Influence Lines for Continuous Viaducts. For important continuous viaducts carrying railway or highway loadings some designers wish complete sets of influence lines. These may be conveniently constructed as follows:

(*a*) Draw influence lines for fixed-end moments in each span. Except in the case of spans free at one end this will require two influence lines for each span.

(*b*) By a series of moment distributions find moments at each support due to a unit unbalanced moment acting successively at the supports. This procedure may be shortened as explained on page 104.

(*c*) Place a unit load at any given point in one span and, by use of influence lines (*a*) above, calculate the fixed-end moments in that span. Multiply each fixed-end moment by the set of values calculated in (*b*). This gives moments at the ends of the beams.

The bending moment at any section due to a unit load at a given section is the sum of the moment at that section due to the unit load on a simple beam and the moment at that section due to moments at the supports. Draw the moment curve for a unit load in the given position.

(*d*) From the series of moment curves (*c*) due to a unit load at various positions the desired influence lines for moment at any given section may be conveniently plotted.

Influence lines for shear may be got by plotting curves of shear instead of curves of bending moment in (*c*). Influence lines for reaction may be obtained from these curves of shears or they may be determined by computing the reactions corresponding to the curves of moments.

This method requires influence ordinates for fixed-end moments and, in the general case, an elastic analysis (moment distribution) for each point of support which is neither free nor fixed. A three-span girder with ends free requires only two elastic analyses, and a four-span girder requires three.

Fig. 16 shows typical procedure for a three-span continuous girder of varying section which is rigidly connected to columns at supports (1) and (2). This figure indicates the method of drawing the moment diagram for a unit load applied at any given point, *a*, in span (1)–(2), and also shows calculations for shears and reactions for a unit load applied at *a*. From these data it is possible to determine the ordinates at *a* of the influence line for bending moment or for shear at any section of the beam or for reaction at any support. If we were to go one step further and draw the shape which the structure (i.e., the load line) would take due to a unit load at *a* we would have the influence line for deflection at *a*. The figure shows only those computations which are necessary to explain the process.

The curve of moments in Fig. 16 is drawn for a single unit load applied at *a*. Therefore the ordinate at *a* of the influence line for bending moment at *a* is numerically equal to i_a, and the ordinate at *a* of the influence line for bending moment at *b* is numerically equal to i_b. The ordinate at *a* for shear in the left end span is numerically equal to the shear in

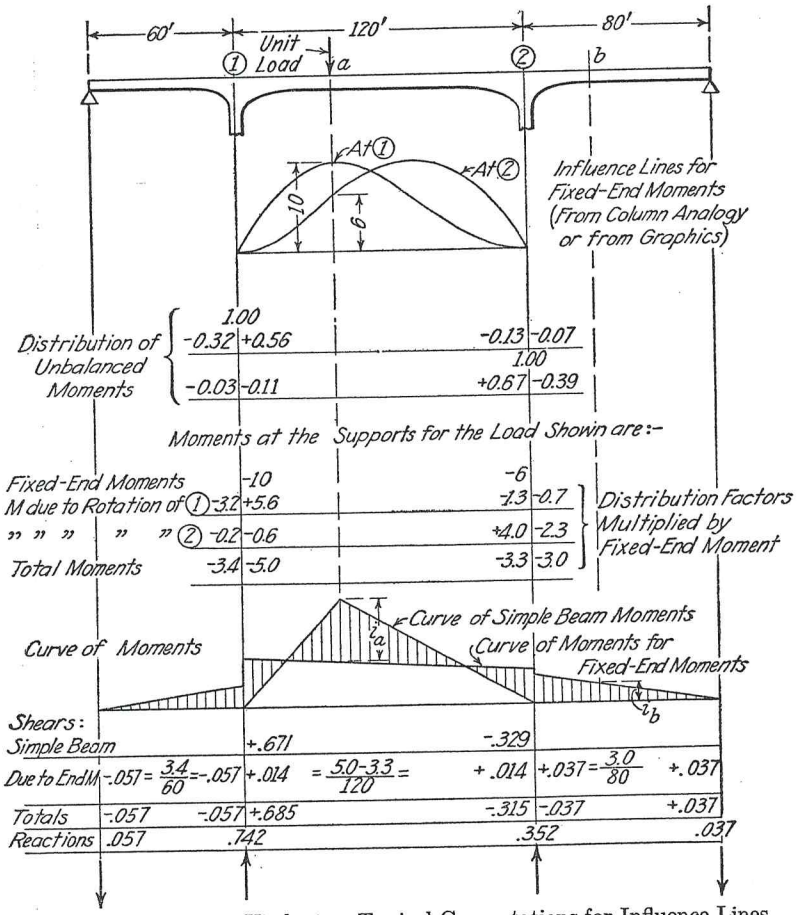

FIG. 16. Continuous Viaduct — Typical Computations for Influence Lines.

that span indicated on the figure; and the ordinate at *a* for reaction at (1) is numerically equal to the reaction at (1) as indicated on the figure.

In order to draw a complete influence line by this method, we must make such a series of calculations for each position of the unit load. The influence lines for fixed-end moments in each span and the distribution factors for a unit bending moment at the ends of the girders need be

calculated only once for a given structure. The calculation of final moments, shears, reactions and influence ordinates is a routine task. The number of these sets of routine calculations required (one for each

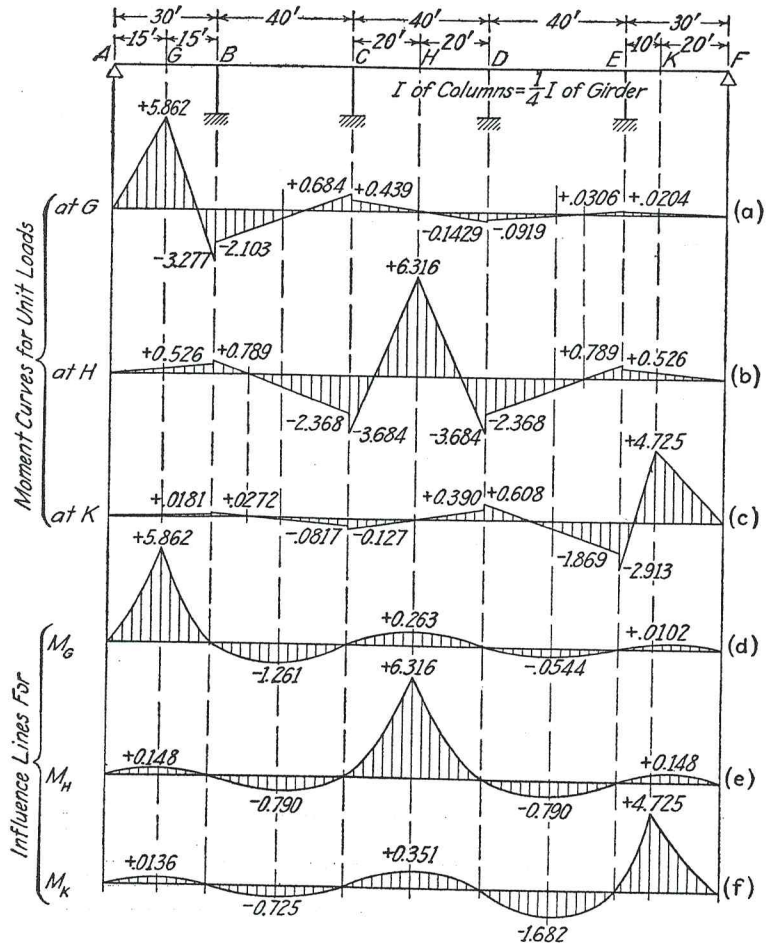

FIG. 17. Continuous Viaduct — Typical Curves of Moment for Single Concentrated Load, and Deduced Influence Lines.

position of the load) depends on the accuracy desired in the influence lines.

Fig. 17 shows typical bending moment diagrams for a single concentrated load applied on a continuous viaduct. It also shows typical influence lines for bending moment at various sections in the girders of the frame. In this figure, note that:

(1) The moment curve in any given span on the left of the loaded span always has the same shape; and the moment curve in any given span on the right of the loaded span always has the same shape. The moment curve for a load in the extreme left span is shown in (*a*), and the moment curve for a load in the extreme right span is shown in (*c*). The moment curve on the left of the loaded span, in (*b*), is similar to the moment curve on the left of that same span in (*c*); that is, the moment curves in spans AB and BC, Fig. 17 (*b*), are similar respectively to the moment curves in spans AB and BC, Fig. 17 (*c*). The same is true for spans on the right of the loaded span. Hence, if we first draw accurate moment curves for loads in the end spans, we need find only end moments when we load other spans. This makes the drawing of complete moment curves a simple procedure.

(2) Fig. 17 (*d*) shows the influence line for bending moment at a section in the left end span; Fig. 17 (*f*), the influence line for bending moment at a section in the right end span; and Fig. 17 (*e*), the influence line for bending moment at a section in an intermediate span.

Note that the influence lines in (*e*) and (*f*) are similar in spans AB and BC, and that the influence lines in (*e*) and (*d*) are similar in spans DE and EF. Therefore, if we draw accurate influence lines for any function in the two end spans we can readily draw the influence lines in all spans on the left or right of any given section: we need calculate only two influence line ordinates, one in a span on the left of the section and one in a span on the right, and we can then draw the influence line by proportion for all spans except the one in which the section itself is located.

Influence Lines for Arches. Fig. 18 shows influence lines for horizontal thrust produced by vertical loads on arches. We can easily picture the shape of these influence lines if we remember that they represent the vertical displacement of the load line due to a unit horizontal displacement of one abutment relative to the other. For parabolic arches we can get an approximate value for the influence line ordinate at mid-span by assuming a shape for the influence line. There is no bending moment at any section of a parabolic arch (neglecting the effect of rib-shortening) if the arch supports a uniformly distributed load over the full span length. The horizontal thrust for this condition of full uniform load is

$$H = wL^2/8h$$

and the area under the influence line is therefore equal to

$$H/w = L^2/8h$$

If we assume further that we know the shape of the influence line we can calculate its center ordinate. Thus, if we assume that the influence

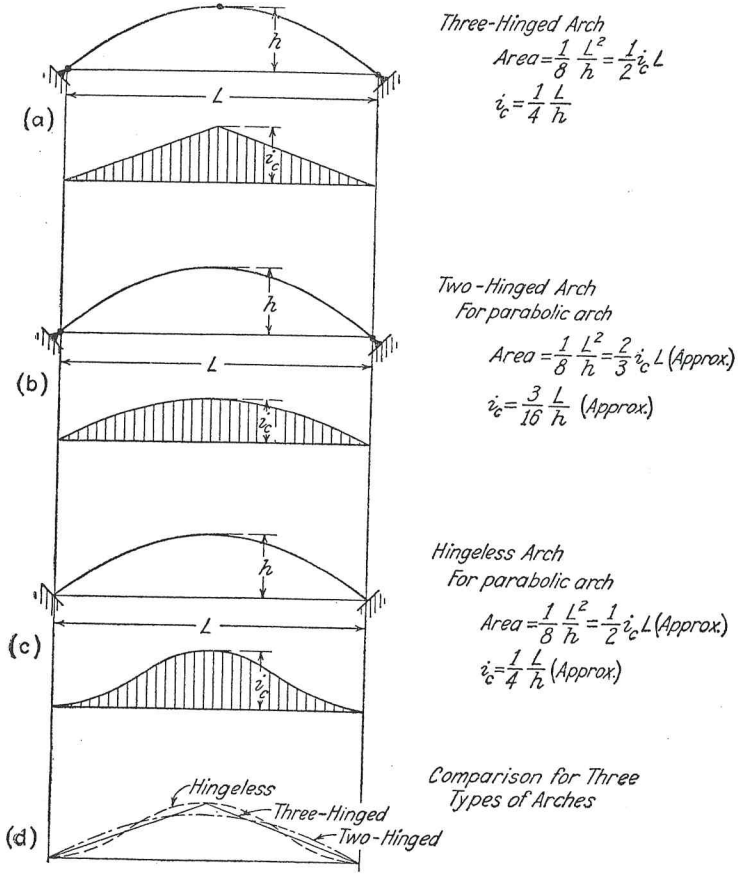

FIG. 18. Influence Lines for Horizontal Thrust — Arches.

line for thrust in a two-hinged arch is parabolic, the area under the influence line is

$$\frac{2}{3} i_c L = \frac{L^2}{8h}$$

and the middle ordinate of the influence line

$$i_c = \frac{3}{16}\frac{L}{h}$$

We would find a different value of the center ordinate if we were to assume some shape for the influence line other than a quadratic parabola. From such studies we can not only get an approximate idea of the influence lines, but we can compare influence lines for different arches.

Fig. 19 shows how approximate influence lines for bending moment at any section, A, of a two-hinged arch may be obtained by combining a parabolic influence line for moment due to horizontal thrust with the influence line for moment on a beam simply supported.

The combination in this case is easy since the structure is indeterminate in the first degree. We have already shown that the ordinate of the influence line for horizontal thrust is approximately $\frac{3}{16}L/h$ at mid-

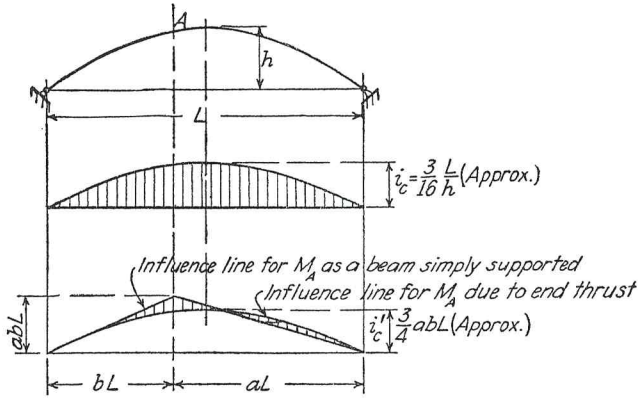

FIG. 19. Influence Lines — Two-hinged Arch.
Above — For Crown Thrust Below — For Moment at A

span if we assume that the influence line is a parabola. If the arch is parabolic and is fully loaded with a uniformly distributed load, there is no moment at A; hence the total area under the influence line must be zero, and the area of the triangle must equal the area of the parabola. Hence

$$\tfrac{1}{2}abL^2 = (\tfrac{2}{3})i_c'L$$

and

$$i_c' = \tfrac{3}{4}abL$$

Hence the maximum (center) ordinate of the curve is approximately equal to three-fourths the maximum ordinate of the triangle. All influence lines for a two hinged arch may be deduced directly from a single curved influence line.

Fig. 20 shows approximate influence lines for bending moment at the springing and at the crown of a hingeless arch. These influence lines

are obtained by combining the influence line for moment due to arch thrust with the influence line for moment on a beam fixed at ends. If the arch is parabolic the area under the influence line is zero, and if the arch is nearly parabolic the area is nearly zero.

To draw the approximate influence line for bending moment at a given section of an arch by this method we draw first the influence line for bending moment at that section for a beam fixed at ends. We then sketch a curve whose ordinates are proportional to the ordinates of the

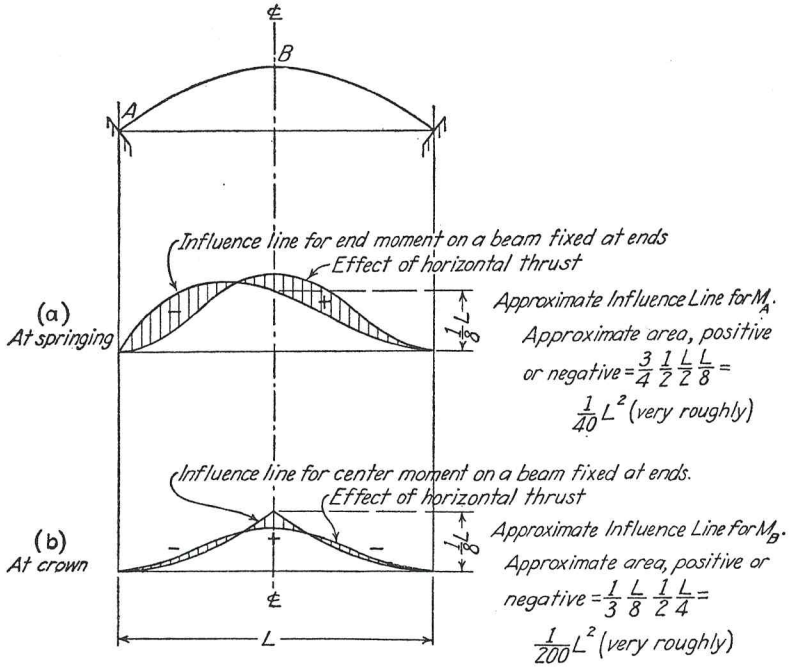

FIG. 20. Influence Lines — Hingeless Arch.

influence line for horizontal thrust, adjusting this curve by successive trials until the positive and negative areas are equal (or nearly equal).

This method of sketching the approximate influence lines is very crude, of course, but even these crude sketches show clearly that the load-divide for crown moment and that for springing moment divide the span in the ratio of nearly 3 to 5 — that is, the load-divides in these cases are nearly one-eighth of the span length on either side of mid-span. The slopes of the influence lines at the load-divides are small, indicating that it is not very important to know their location exactly.

Influence Lines for Continuous Series of Arches on Slender Piers. Series of arches of reinforced concrete resting on slender piers have recently received a good deal of attention in American literature. It is intended here to refer only briefly to influence lines for such structures. Such influence lines may be thought of as made up of three parts:

(1) The influence line for any function if the arch were rigidly fixed at ends.

(2) The influence line for the effect of displacement of the pier tops.

(3) The influence line for the effect of rotation of the pier tops.

Rotation of the pier tops commonly has less effect on the final influence line than displacement of pier tops.

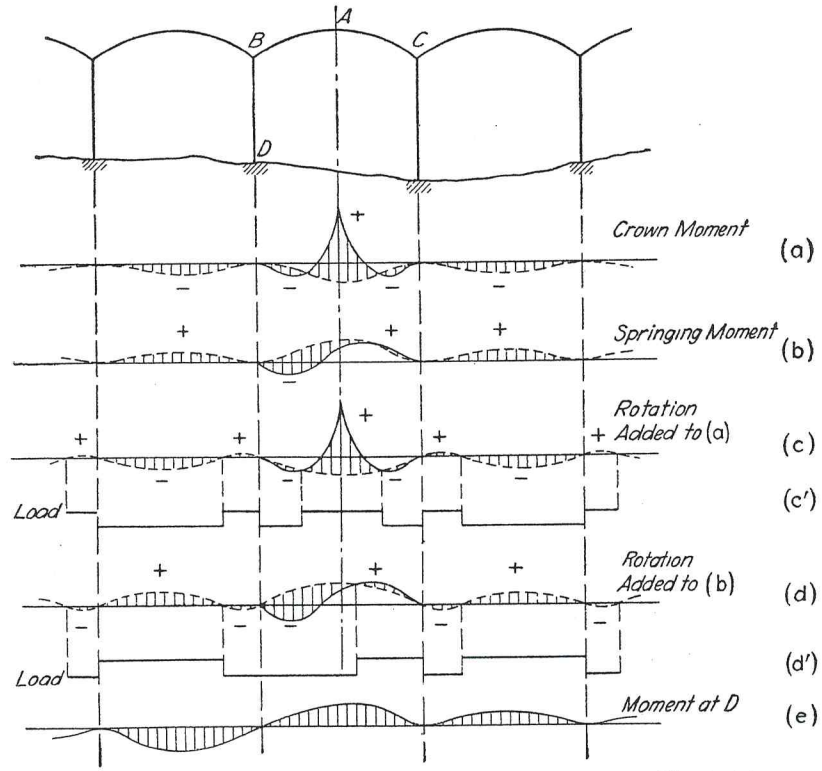

FIG. 21. Typical Influence Lines — Continuous Arches on Elastic Piers.

Influence lines for arches fixed at ends have already been discussed.

Let us imagine that the pier tops at B and C (Fig. 21) spread horizontally without rotation, and sketch the shape of the deflected load line for the entire structure due to this spread of pier tops. Evidently the

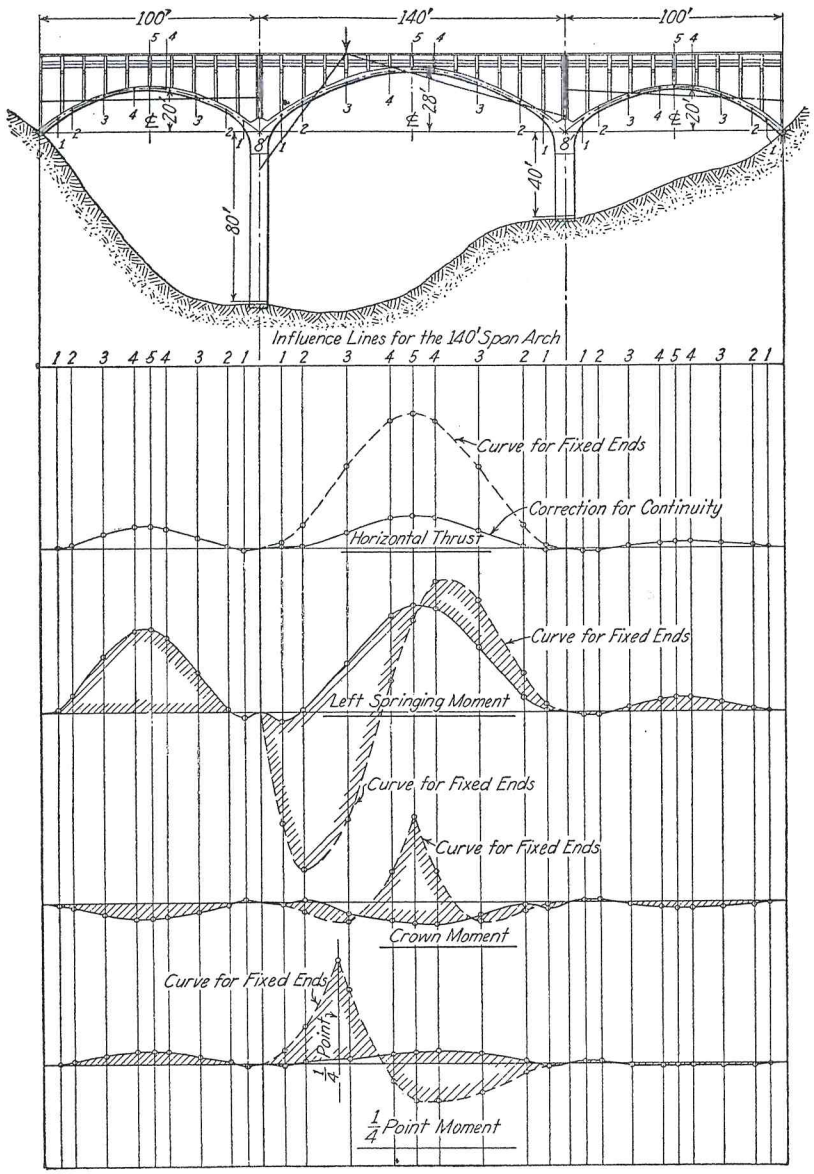

FIG. 22. Typical Influence Lines — Continuous Arches on Elastic Piers.

load line will drop in span BC and it will rise in all other spans in the structure. For graphic reasons the displacements from thrust are reversed in the span under consideration. This effect is shown by the dotted lines in Fig. 21 (a) and (b). If we assume no rotation of pier

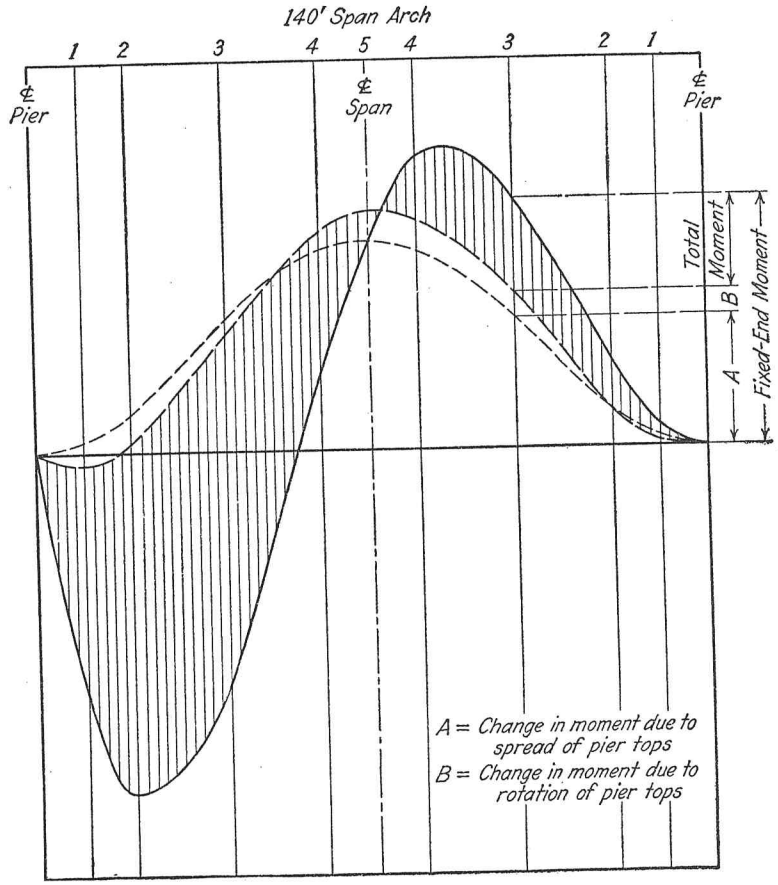

FIG. 23. Comparison of Component Elements — Influence Lines for Continuous Arches. (Center Span of Fig. 22.)

tops the curve of rise or fall of the load line evidently has the shape of an influence line for crown thrust, but the ordinates become proportionately smaller as we go outward from the span BC.

Fig. 21 (a) shows the influence line for bending moment at the crown and Fig. 21 (b) shows the influence line for bending moment at the springing of span BC obtained by combining the influence lines for a

fixed arch with the influence line for effect of displacement of pier tops without rotation.

Rotation of the pier tops modifies these influence lines somewhat, though not very materially. The effect can be estimated qualitatively in Fig. 21 (*c*) and (*d*) by rotating the pier tops, thus relieving the effect of horizontal thrust on one side of the pier and increasing it on the other. The final influence lines will be more like those shown in (*c*) and (*d*) than like those shown in (*a*) and (*b*).

The moment at the base of pier B is due to the horizontal thrust taken by the pier as the pier tops spread, and slightly to the rotation of the pier tops. Fig. 21 (*e*) shows the shape of the influence line for moment at D.

Fig. 22 gives influence lines for various functions in a certain continuous arch series.

Fig. 23 shows the relative effect of spread of piers and of rotation of pier tops on the influence line for springing moment on the center span shown in Fig. 22.

Graphical Constructions

Graphics will often be found as convenient in the study of continuous structures as it is in problems dealing with structures which are statically determinate. There can be little doubt as to the value of a pretty complete knowledge of graphics; no one is a complete master of algebraic methods who is not familiar with graphics, nor is anyone fully competent to use graphics who is not a master of algebraic methods. The easiest solution of a problem is sometimes algebraic, sometimes graphical, often a combination of the two. Below, largely for suggestion, are given some graphical constructions for influence lines.

Graphical Determination of Centroid, Statical Moments and Products of Inertia of Areas. To determine the properties of an area, separate into parts so small that their centroidal moments of inertia and products of inertia may be neglected, and treat each of these areas as if it were a force. Lay these off vertically and draw a string polygon. The first and last strings intersect on a vertical through the centroid.

The statical moment of the area about any vertical axis is the intercept of the first and last strings on this axis multiplied by the pole distance.

To find the product of inertia about two vertical axes, use the intercepts on one of these axes of the polygon just drawn as new forces for a new polygon. The intercept on the second axis of the first and last strings of this second polygon multiplied by the product of the pole distances used is the product of inertia wanted.

To locate the centroid horizontally, repeat the above process, except that the small areas are treated as horizontal forces.

To find the product of inertia about two axes which are not parallel, draw the first polygon with the areas acting as loads parallel to the first axis and find all intercepts on this axis. Then treat these intercepts as forces parallel to the second axis and draw a new string polygon. The intercept on the second axis of the first and last strings of this sec-

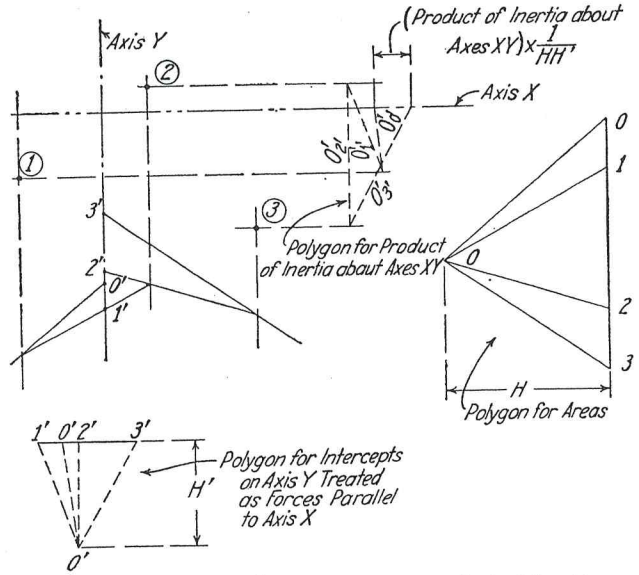

FIG. 24. Graphical Construction — Product of Inertia.

ond polygon times the product of the two pole distances used is the product of inertia wanted.*

Fig. 24 shows the construction for product of inertia about two axes, X being horizontal and Y vertical.

* We can find graphically the value of any function of the form $a\Sigma xy$. To do so find the intercept on $y = 0$ of a string polygon for loads x at distances y using a pole distance $1/a$.

To find the value of the function of the form $ab\Sigma xyz$:

(1) Draw first a string polygon for loads x at distances y using a pole distance $1/a$. Find all intercepts on $y = 0$.

(2) Using these intercepts as loads at distances z and using a pole distance $1/b$, find the intercept on $z = 0$.

Note that this is merely graphical arithmetic; it involves no structural principles. Of course, by using successive polygons, we could find $abc\Sigma xyzw$, or for any number of variables.

Graphical Determination of Kern Distances. In a section such as AB, Fig. 25, having only one axis of symmetry the kern point is, by definition, that point at which a load should be applied to produce no stress at the far edge A of the section. Then

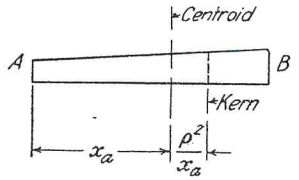

FIG. 25. Kern Relations.

$$f_a = \frac{1}{A} + \frac{\text{kern distance}}{I_0} x_a = 0$$

$$\text{Kern distance} = -\frac{I_0}{Ax_a} = \frac{\rho^2}{x_a} \text{ as shown in}$$

the figure.

The moment of inertia about the centroid may be found by the construction explained above as the intercept on the centroidal axis between the first and last strings of a polygon, the loads for which are the intercepts on this axis of any other string polygon drawn for the given areas.

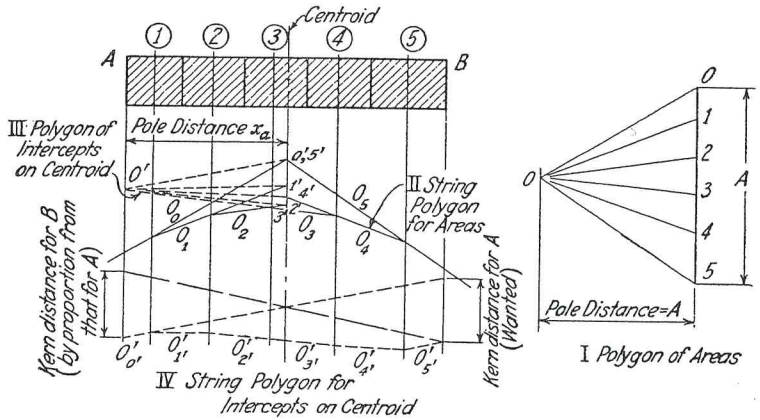

FIG. 26. Graphical Determination of Kern.

This intercept is to be multiplied by the product of the pole distances for the two polygons:

$$I_0 = \text{intercept} \times H_1 H_2$$

If we make the pole distance of the first polygon equal to A (see Fig. 26) and that of the second polygon equal to x_a then

$$I_0 = Ax_a \times \text{intercept.}$$

$$\text{Then} \quad \text{Kern distance} = \frac{I}{Ax_a} = \frac{Ax_a \times \text{intercept}}{Ax_a} = \text{intercept.}$$

The kern distance, then, is the intercept of a moment of inertia polygon

for which the first pole distance is A and the second pole distance is x_a. With the kern distance for A found, that for B follows from

$$\frac{\text{Kern distance for } A}{\text{Kern distance for } B} = \frac{x_b}{x_a}$$

Fig. 26 shows the construction. After the kern distance for A is found, that for B is got by proportion, as indicated separately in Fig. 27. Obviously for accuracy more divisions should be used.

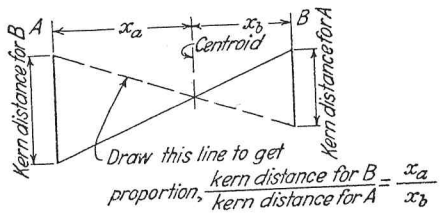

FIG. 27. Kern Relations.

Graphical Application of the Column Analogy. The most useful quantitative application of Müller-Breslau's Principle is in graphics. If we apply the generating displacement indicated by this theorem in the column analogy, we may deduce an interesting theorem in the graphical construction of influence lines. In the column analogy when applied to a single span of beam or arch the unit rotation indicated is analogous to a unit load on the column, and a unit displacement is analogous to unit moment about a centroidal axis of the analogous column parallel to the line of displacement. We have already shown how to find the neutral axis of the analogous column section and how to find the components of the indeterminate force F which acts along this neutral axis — or, rather, along what in the beam or arch corresponds to the neutral axis of the analogous column. See page 52.

In any single-span beam or arch, fixed at ends,* on either side of the section for which an influence line is to be drawn, the influence ordinate at any point to scale is the product of inertia of all elastic areas between the end of the beam and that load point, about the line of action of the load and the neutral axis of the analogous column for the generating displacement indicated by Müller-Breslau's Principle. To get the absolute value we should multiply by the value of the indeterminate force F, which can be done automatically in graphical construction by proper selection of pole distances.

This general theorem may be proved thus:

* The theorem can be so stated as to apply to two-hinged arches, but it is somewhat more complicated in the general statement.

Suppose that it is desired to find the influence ordinate at A for the moment at C on the arch shown in Fig. 28 due to loads acting in the direction indicated. Müller-Breslau's Principle tells us to apply unit rotation at C. We can, for this rotation, find by the column analogy the redundant force F and its line of action. We now wish to find the deflection of A in the direction of the loading due to the action of this force. The analogy of angle weights tells us that this deflection of A is the statical moment about an axis through A parallel to the direction of loading of all angle changes produced by F between A and the end of the beam. At any point B the angle change is Fca, where a is the elastic area at B. The statical moment of this about axis through A is $Fcba$, or F times the product of inertia of the elastic area at B about F and the line of action of the force through A. Summation of these products of inertia leads to the theorem stated above.

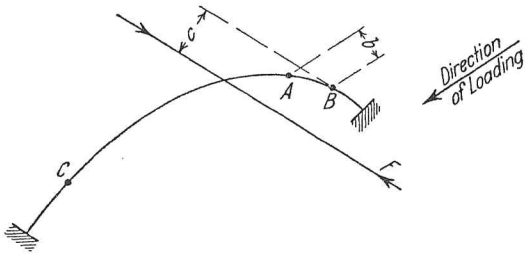

FIG. 28. Relations Involving Product of Inertia in an Arch.

The theorem is here stated in terms so general that specific application is needed. We can, of course, apply this theorem arithmetically, but its chief value is in graphics; in getting products of inertia, graphics has the advantage that addition and multiplication are performed automatically and simultaneously. In a previous section it has been shown how all influence lines for an indeterminate structure may be got by combining influence lines for thrusts, shears and moments at the ends of the individual members when these ends are considered as fixed. The most useful application of the theorem is in drawing such influence lines, especially those for end moment on beams fixed at ends and for the thrust of arches.

To draw by this method the influence line for end moments in a beam fixed at ends, we find the curve of products of inertia about the neutral axis of the analogous column and the load points and multiply by F. But

$$F = \frac{x_a}{I} = \frac{x_a}{A\rho^2} = \frac{1}{A}\,\frac{1}{\dfrac{\rho^2}{x_a}}$$

Now ρ^2/x_a is the kern distance for the end. If, then, we draw the first string polygon with a pole distance equal to the total elastic area A

and the second string polygon for intercepts on the kern line and with a pole on the centroidal axis, the influence line will be to scale. This latter pole may as well be so chosen that the base line — the last string — of the influence line is horizontal.

To draw, by this method, the influence line for thrust in a symmetrical arch we find the curve of products of inertia about the horizontal axis

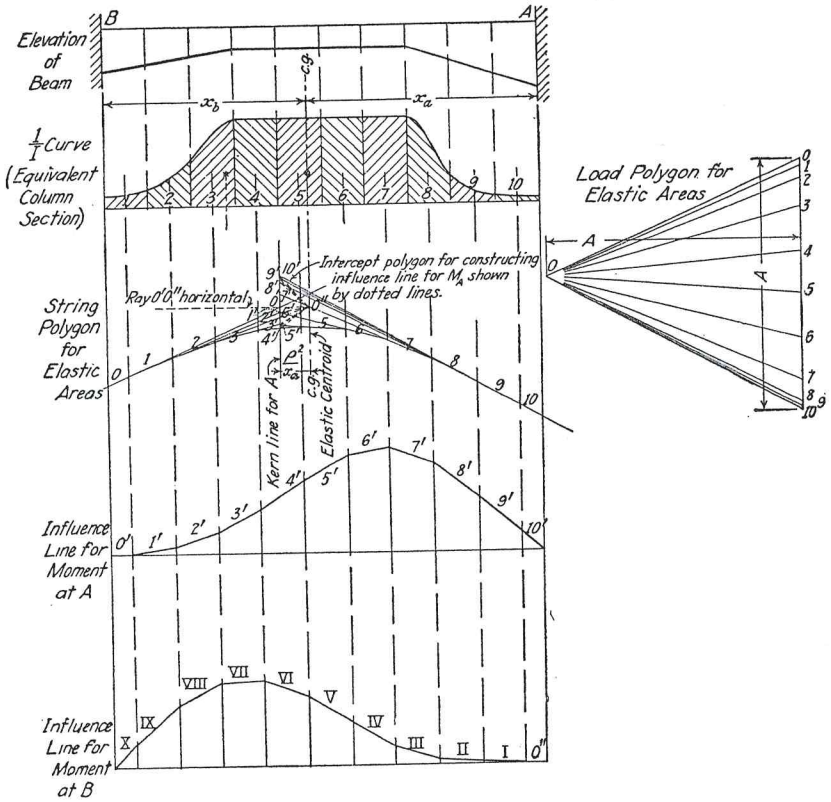

FIG. 29. Influence Lines for Fixed-end Moments — Graphical Construction.

through the elastic centroid of the arch with a pole distance for the first polygon equal to A, the total elastic area, and for the second polygon of $\rho_y^2 = I_y/A$. If, instead of the influence line for horizontal thrust, we wish the influence line for moment at the springing due to the thrust, we would choose as the second pole distance ρ_y^2/y, where y is the distance from the centroidal axis to the springing of the arch.

Illustrations of Graphical Construction of Influence Lines. *Influence Lines for Fixed-end Moments in a Beam. Fig. 29.* As explained

above, this is a curve of products of inertia about the load points and the kern points. Proceed as follows:

(1) Using the elastic areas as loads find the total elastic area, the centroid and the kern points of the analogous column section. The determination of I_0 and of the kern points involves a polygon not shown in the figure.

(2) For the string polygon for the elastic areas and a pole distance equal to the total elastic area — it has already been drawn — find the intercepts on the kern line for either end.

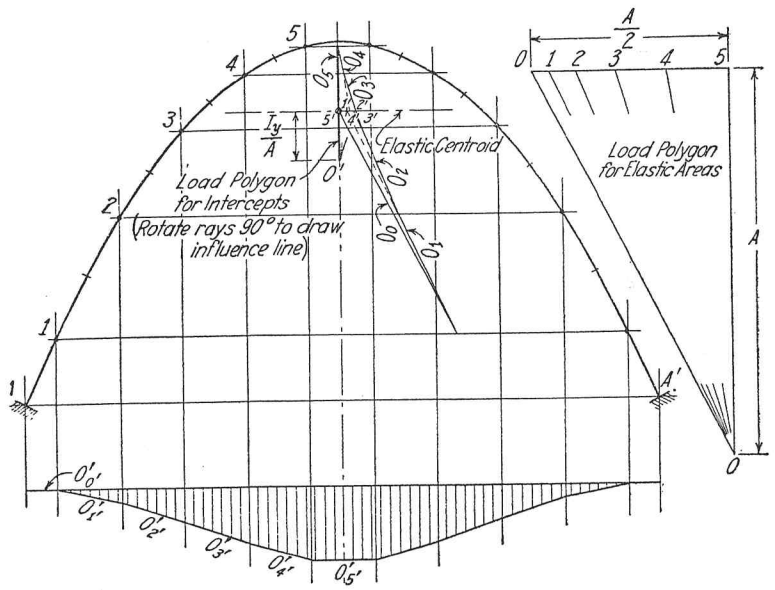

FIG. 30. Influence Line for Crown Thrust in Arch — Graphical Construction.

(3) Using these intercepts as loads with a pole, $0''$, on the centroid — preferably so chosen that the first string, $0''0'$ for end B or $0''10'$ for end A shall be horizontal — draw the desired influence line. It will be to scale. The accuracy of the construction is checked if the polygon closes at A — or at B for the influence line for B.

Influence Line for Thrust in a Hingeless Arch. Fig. 30. To draw an influence line for horizontal thrust, we apply a unit horizontal displacement. This is equivalent to a unit couple acting about a horizontal axis on the analogous column. For a symmetrical arch, the neutral axis is horizontal through the centroid and $F = 1/I_y$. Proceed as follows:

(1) For the given elastic areas find the centroid and I_y. To determine I_y involves another polygon not shown.

(2) Find the intercepts on the neutral axis of the string polygon for the loads. We have used a pole distance A.

(3) Draw a curve of products of inertia for these intercepts with pole distance $I_y/A = \rho_y^2$. This is the influence line for horizontal thrust to scale of distance. In the diagram we have exaggerated the vertical scale to gain accuracy. Of course, values of ds must be got from a diagram on natural scale.

A similar diagram may be drawn for an arch which is not symmetrical, except that the neutral axis will not be horizontal and the product of the two pole distances must be $1/F$.

Note that it is quite as easy to draw the influence line for horizontal loads or for inclined loads by modifying the direction of the rays and of the load lines in the second polygon.

Semi-graphical Analysis for Influence Lines in an Arch. Figs. 31 and 32 show constructions for drawing influence lines for any arch fixed at ends. To add accuracy, the scale of the vertical ordinates has been exaggerated. More divisions should be used than are shown here. The values of ds must be got from a diagram drawn to natural scale.

(1) In Fig. 31 lay off load polygon 1 for the given elastic areas. With a pole distance A draw string polygons 1a and 1b. This locates the centroid vertically and horizontally by the intersection of the first and last strings. Polygon 1a is an influence line for P/A.

(2) Using the intercepts of 1a on the centroid and any convenient pole distance (load polygon 2) draw string polygon 2 — Fig. 32. This is an influence line for M_x in the column analogy.

(3) Using the intercepts of 1b on the centroidal axis and the same value for pole distance as in load polygon 2, but to the vertical scale, draw load polygon 3, Fig. 31.

From this load polygon draw string polygons 3 and 3a. The intercept on the centroidal axis of the first and last strings of 3a gives I_y. The intercept on the centroidal axis of the first and last strings of 3 gives I_{xy} and the ordinates at the load points give values of M_y in the column analogy.

We may now correct the values of M_x, M_y, I_x and I_y for dissymmetry and by computation determine thrust lines and fiber stresses for various positions of a unit load.

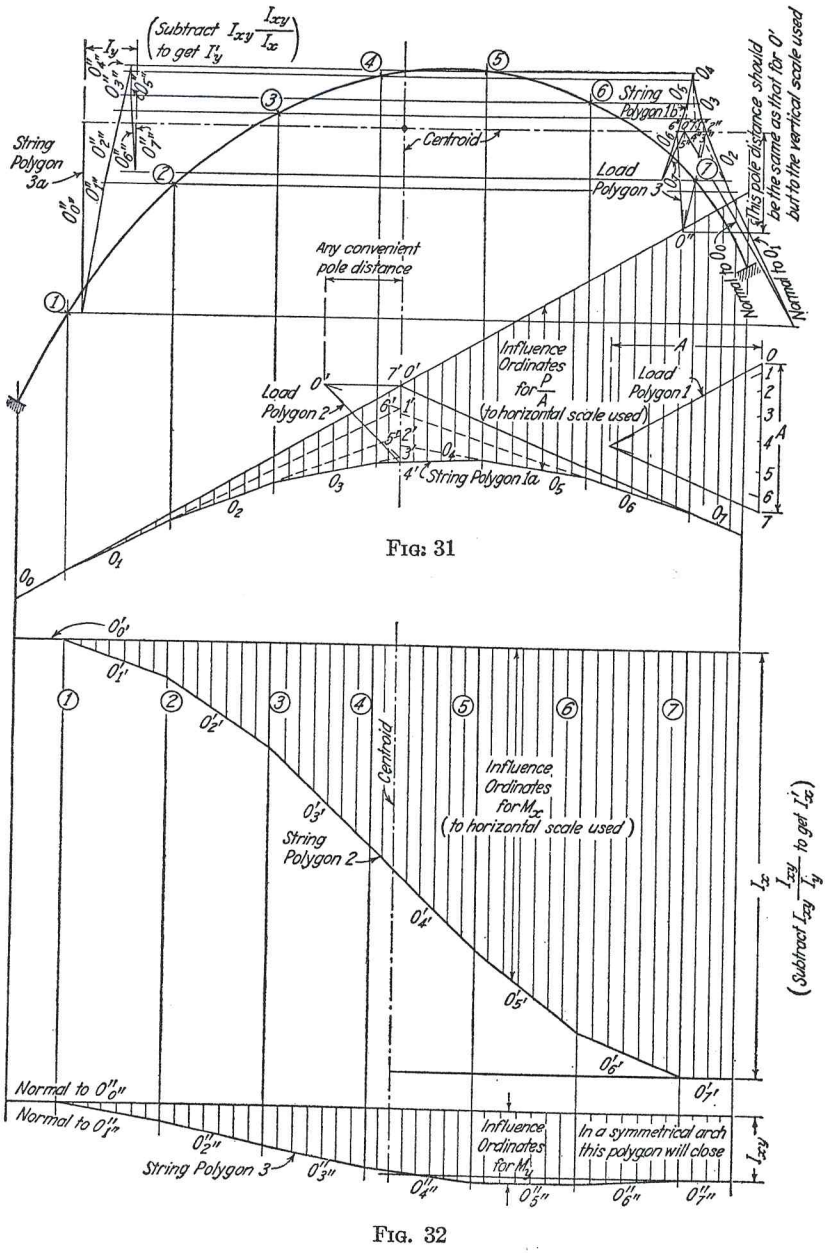

FIG. 31

FIG. 32

Semi-graphical Analysis — Influence Lines for Unsymmetrical Arch.

CHAPTER IX

RIGHT ARCHES OF REINFORCED CONCRETE

A. Analysis

The reader should clearly understand the distinction between analysis and design; the former is a mechanical procedure, the latter involves a large amount of judgment. By analysis we determine the stresses in an arch of given dimensions, whereas design involves the selection of desirable dimensions for the arch. A common error made by students is to become so fascinated by the analytical procedure that they have neither time nor interest for the more important problems of design.

In spite of a general idea to the contrary, there is nothing especially intricate about the mathematics involved in the analysis of an arch. The relations are no more complicated than those involved in stress analysis of beams and struts; in fact, the algebraic relations are identical in the two problems. The analysis, however, does involve a good deal of computation. The quantities wanted are usually the difference of two other quantities which are nearly equal, and this in some cases may require considerable precision in the computations.

There is an extensive literature on the subject of arch analysis. Usually each writer has presented some slight variation of technique, which he considers to constitute a new method. The object of these variations has been, consciously or unconsciously, to reduce either the number of terms to be computed or the precision of computation required. Some have sought to escape all tedious computation by use of graphical arithmetic. Graphics has a special appeal in arch analyses because by its use addition and multiplication are done at the same time. The difficulties arising from the need of precision remain, however.

In the method of analysis used in this chapter the number of terms to be computed has been reduced to a minimum. The required degree of precision may be reduced by choosing the curve of static moments so that the values of these static moments are small. The indeterminate moments deduced, which are corrections to the assumed static moments, are then very small and need not be found very precisely.

Procedure in Analysis. The analysis of stresses in an arch consists in determining the reactions — or, what is the same thing, the internal moments — so that both the laws of statics and the conditions of ge-

ometry are satisfied. The exact form of the equations which are to be written and the order in which they are to be combined in solving them are subject to unlimited variation.

If the curve of the arch axis can be represented by a simple equation and the variation of the moment of inertia along that axis can also be represented by a simple equation, it may be convenient to use the calculus and derive general expressions for the values sought. Thus if the arch axis is parabolic ($y = ax^2$) and $I \propto (ds)/(dx)$, where ds and dx are the lengths respectively of a short portion of the axis and of its horizontal projection, all the terms involved are easily integrable and the expressions resulting are of convenient form. If the arch axis is circular in form and the moment of inertia is constant, the expressions are integrable but the results are not very simple or convenient.

For purposes of general investigation such mathematical expressions are sometimes useful. They have of course the advantage that they indicate general relations. But arches as actually constructed are usually neither parabolic nor circular, and the variation of the moment of inertia along the axis is not simple. It therefore becomes necessary to resort to a process of summation in place of integration.

In dividing the arch axis for summation we may either divide it so that the lengths of the segments are constant (Δs is constant) or so that the length of segment is proportional to the moment of inertia ($\Delta s/I$ is constant) or so that the horizontal projections are constant (Δx is constant). All these methods have been used by different writers.

The first method, in which the length of the segments is constant, seems to offer no advantages.

The second method, in which $\Delta s/I$ is constant, has been extensively used. It has the advantage that the unit used in the summation is constant. On the other hand a special construction is needed to make such a division. Moreover, the segments of the axis become very long near the springing where the moment of inertia is large, and accuracy is sacrificed. This objection can be overcome by subdividing these long segments, but the expected simplicity of the method has been sacrificed. The method is not recommended.

The third method of division (Δx constant) is used in this chapter. It is an easy matter to make the divisions, and the resulting values of x are convenient, since they are in the ratio 1, 3, 5, etc.

Method of Analysis. The method of analysis recommended is that of the column analogy. This general method for closed rings has been explained in detail in Chapter III. As specifically applied to an arch, it may be well to review it briefly here.

For stresses produced by loads on the arch we first select a convenient

curve of moments in the arch ring statically consistent with these loads. Of course, there are an unlimited number of such curves; we select one which is simple and convenient.

For stresses due to changes of temperature, to shrinkage, to rib-shortening (shortening in the arch rib due to stress), to abutment movements, we need to determine the amount of movement which would take place from such a cause if the arch ring were free from its abutments.

Moments Due to Loads — Symmetrical Arches. Our problem is now to find the change in the moments or the change in the reactions due to the restraint produced by the abutments.

The change in moment at any point, if we use the terminology of the column analogy, may be determined from the general formula for flexure,

$$f = \frac{P}{A} + \frac{M_x'}{I_x'}\,x + \frac{M_y'}{I_y'}\,y \text{ in the case of unsymmetrical arches}$$

which reduces to the form:

$$f = \frac{P}{A} + \frac{M_x}{I_x}\,x + \frac{M_y}{I_y}\,y \text{ in the case of symmetrical arches.}$$

Treating first only the more common case of symmetrical arches we define the terms as follows:

f is the change of moment due to the restraint of the abutments.

x, y are the coordinates of the point at which the change in moment is wanted referred to axes through the elastic centroid of the arch, as defined below.

P is the total elastic load on the analogous column defined as $\sum ma$, where m is the moment determined above for the assumed curve of static moments

a is the "elastic area," or length of segment divided by the moment of inertia, $\Delta s/I$, on which this moment acts.

M_x is the statical moment of the elastic loads just defined along the axis of X, or $\sum max$.

M_y is the similar value along the axis of Y, or $\sum may$.

$A = \sum a$.

$I_x = \sum ax^2$.

$I_y = \sum ay^2$.

The properties of the arch ring are defined by the values of a, x, y for each segment, from which $\sum a$, $\sum ax^2$, $\sum ay^2$ are to be computed. The properties of the "elastic load," to be found from the given static moment m on each section, are $\sum ma$, $\sum max$ and $\sum may$.

The "elastic centroid" of the section is defined by $\sum ax = 0$, $\sum ay = 0$. Since the vertical height of the centroid is not at first known, we com-

pute all quantities first for any convenient horizontal axis and then correct the computed values to the centroidal axis.

Reactions Due to Loads — Symmetrical Arches. If, as is usually more convenient in arch analyses, we prefer to find the reactions and then the moments from the pressure line, we find the change in the reactions from that assumed in drawing the original pressure line:

$$v_i = \frac{M_x}{I_x} \qquad h_i = \frac{M_y}{I_y}$$

and one intercept of its line of action. (See Fig. 1.)

$$x_1 = -\frac{P}{Av_i} \qquad y_1 = -\frac{P}{Ah_i}$$

The pressure line may then be redrawn.

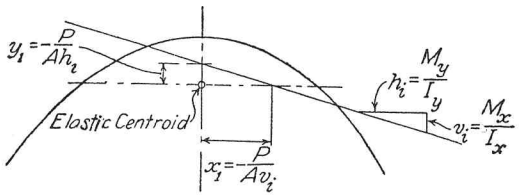

FIG. 1. Arches — Thrust Line for Indeterminate Force.

Moments and Reactions Due to Change of Temperature, to Shrinkage, to Rib-shortening, or to Spread of Abutments — Symmetrical Arches. The same method of computation is followed as for loads. The " elastic load " in this case is a moment along the axis of Y equal to the indicated change of span.

Linear displacement in the column analogy is equivalent to a bending moment about a parallel axis through the centroid. Thrust is then

$$H = \frac{M_y}{I_y}$$

Temperature change would produce a horizontal displacement $\epsilon t^\circ L$ if the ends were not restrained, and hence

$$H_t = \frac{E\epsilon t^\circ L}{I_y}$$

Rib-shortening similarly would produce a change in span length equal to $f_c L$ and hence

$$H_{RS} = \frac{f_c L}{I_y}$$

where f_c = average unit compression for any loading.

The moment due to thrust is $H \cdot y$, where y is the distance from the centroidal X axis to the point considered.

Or we may write directly from the column analogy (including the factor E, usually omitted in the calculations for I_y):

$$m_i = \frac{\epsilon E t^\circ L y}{I_y}$$

for temperature change and a percentage amount for rib-shortening.

Quantities to be Computed. The following quantities need consideration: (*a*) Stresses in the arch ring at crown, at springing and, rarely, at quarter point, due to dead load; (*b*) maximum stresses at these points due to moving live load; (*c*) stresses due to shrinkage and to temperature change; (*d*) possible stresses due to abutment movements; (*e*) reactions on the foundations.

The relative compressive stresses in the arch ring from dead load, live load and deformation vary a good deal in different arches, but in an arch properly proportioned the following values may be taken as fairly representative.

Dead load stresses	— Due to thrust	50%	40%–60%
	— Due to moment	Small	
Live load stresses	— Due to thrust	5%	20%–50%
	— Due to moment	30%	
Temperature and shrinkage stresses	— Due to thrust	Small	5%–20%
	— Due to moment	10%	
		100%	

Of these the stress due to dead load is subject to few uncertainties, whereas the stress due to live load is uncertain for several reasons and the stresses produced by temperature changes and by shrinkage are subject to even greater uncertainties.*

The stresses produced by rib-shortening are usually about the same as for a drop of temperature of 15° to 20° and need be computed only where they affect stresses which are critical.

Moments and Reactions in Unsymmetrical Arches. If the arch is unsymmetrical, we use the more general form of the flexure formula. The change in moment due to continuity is given by

$$f = \frac{P}{A} + \frac{M_x'}{I_x'}x + \frac{M_y'}{I_y'}y$$

* See "Dependability of the Theory of Concrete Arches," by Hardy Cross. Bul. 203, Eng. Exp. Sta., Univ. Ill., 1929.

where

$$M_x' = M_x - M_y \frac{I_{xy}}{I_y}$$

$$M_y' = M_y - M_x \frac{I_{xy}}{I_x}$$

$$I_x' = I_x - I_{xy} \frac{I_{xy}}{I_y}$$

$$I_y' = I_y - I_{xy} \frac{I_{xy}}{I_x}$$

Here $I_{xy} = \sum axy$

All other terms have the same values as given above for symmetrical arches.

The change in reaction due to continuity is given by

$$v_i = \frac{M_x'}{I_x'} \qquad h_i = \frac{M_y'}{I_y'}$$

the intercepts of the line of action of this reaction being

$$x_1 = -\frac{P}{Av_i} \qquad y_1 = -\frac{P}{Ah_i}$$

It will be seen that the analysis of an unsymmetrical arch differs from that of a symmetrical arch in that

(*a*) The whole arch ring must be included in the analysis instead of only half of it.

(*b*) The position of the elastic centroid is unknown both vertically and horizontally, whereas in the symmetrical arch the position of the vertical centroidal axis is known by inspection.

(*c*) The value of I_{xy} must be computed.

(*d*) The corrections for dissymmetry must be made to determine M_x', I_x', M_y', I_y' after M_x, I_x, M_y, I_y are known.

Illustrative Computations. In Figs. 2, 3, 4 and 5 are given illustrations of computations for influence ordinates for kern moments and for temperature effects in an unsymmetrical arch and in a symmetrical arch. The analysis for an unsymmetrical arch is first followed through in detail. This is followed by the analysis for a symmetrical arch, using exactly the same form of computations to indicate just what is omitted because of symmetry.*

Unsymmetrical Arch. The arch analyzed is shown in Fig. 2 and the computations in Fig. 3. It has a span of axis of 60 ft., divided into five

* The analyses and discussion which follow are taken from "The Column Analogy," by Hardy Cross, Bul. 215, Eng. Exp. Sta., Univ. Ill., 1930.

panels of 12 ft. each. The total rise is 20 ft. and the difference in level between abutments is 15 ft.

The arch axis is first divided into fifteen segments of equal horizontal projections.

Use as convenient trial axes horizontal and vertical lines through the highest point of the arch axis.

Tabulate first the known properties of the arch. These are the length of each segment L along the arch axis, the distances x and y to its centroid, the depth of the sections at their centers.

Now compute the elastic areas a, each equal to $L/I = 12\ L/d^3$; this is for unit width of rib. From these compute the statical moments ax and ay about the axes of X and Y, the products of inertia about these axes ax^2, ay^2, axy.

Now tabulate the m_s values at centroids of sections for unit loads at each of the panel points, A, B, C, D. The statically determinate moments will be found for these loads cantilevered from the nearer end of the arch. The statically determinate moment on any segment between the load and the nearer abutment, then, equals the distance from the load to the centroid of that segment. We then compute the elastic load $P = m_s a$, the moment of the elastic load about the axis of Y, Px, and about the axis of X, Py. Note that for any segment these three quantities may be written by multiplying m_s by columns (6), (7), (8), respectively.

Sum the columns for elastic area, statical moments, products of inertia, elastic loads, elastic moments.

Correct to the centroid. Compute $\bar{x} = (\sum ax)/A$ and $\bar{y} = (\sum ay)/A$ and the corrections for the products of inertia $\bar{x}^2A$, $\bar{y}^2A$, $\bar{x}\bar{y}A$, and for the elastic moments $\bar{x}\sum P$, $\bar{y}\sum P$. Subtract the corrections.

Correct for dissymmetry. Write the value of $(I_{xy}/I_y)I_{xy}$ under I_x and of $(I_{xy}/I_y)M_y$ under M_x and write the value of $(I_{xy}/I_x)I_{xy}$ under I_y and of $(I_{xy}/I_x)M_x$ under M_y. Subtract the corrections.

Draw horizontal axis through the centroid. Now compute for a load at each panel point the values of the components of the more distant reaction $v_i = M_x'/I_x'$ and $h_i = M_y'/I_y'$ and the intercept on the X axis through the centroid, $x_1 = -P/(Av_i)$.

Rib-shortening has not been included in the computations. It may be corrected for by computing the average intensity of compression for any given condition of loading and from this the change of span which would take place if the arch were free to contract. This change of span may then be treated as if it were due to change of temperature; equivalent temperature change $= f_{av}/E\epsilon$.

The components and location of one reaction (at the more distant

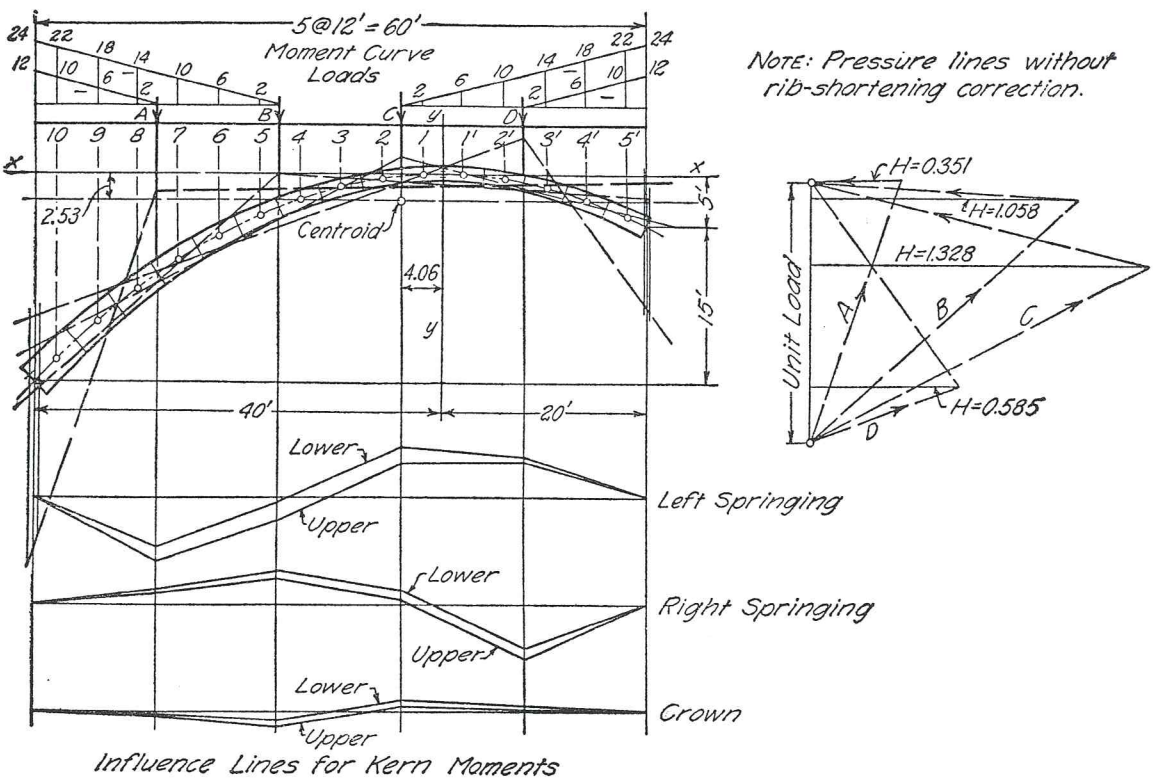

FIG. 2. Unsymmetrical Arch — Influence Lines — (See Fig. 3.)

Properties of the Section											Elastic Loads — Unit Load at:															
Given					Derived						A				B				C				D			
1	2	3	4	5	6	7	8	9	10	11	12	13	14	15	16	17	18	19	20	21	22	23	24	25	26	27
No.	L, ft.	d, ft.	x	y	a	ax	ay	ax^2	ay^2	axy	m_s	P	M_x	M_y	m_s	P	M_x	M_y	m_s	P	M_x	M_y	m_s	P	M_x	M_y
10	5.58	3.34	-38.0	-18.05	0.150	-5.70	-2.71	2.17	49.0	+103.0	-10	-1.50	+57.0	+27.1	-22	-3.30	+125.5	+59.5								
9	5.23	3.04	-34.0	-14.45	0.187	-6.36	-2.70	2.16	39.0	+91.7	-6	-1.12	+38.0	+16.2	-18	-3.36	+114.1	+48.6								
8	5.00	2.79	-30.0	-11.25	0.231	-6.94	-2.60	2.08	29.3	+78.0	-2	-0.46	+13.8	+5.2	-14	-3.24	+97.2	+36.4								
7	4.78	2.54	-26.0	-8.45	0.291	-7.56	-2.46	1.97	20.8	+64.0					-10	-2.91	+75.6	+24.6								
6	4.55	2.33	-22.0	-6.05	0.361	-7.93	-2.18	1.74	13.2	+48.0					-6	-2.17	+47.7	+13.1								
5	4.45	2.16	-18.0	-4.05	0.443	-7.96	-1.79	1.43	7.3	+32.2					-2	-0.89	+16.0	+3.6								
4	4.26	2.00	-14.0	-2.45	0.533	-7.46	-1.31	1.04	3.2	+18.3																
3	4.17	1.83	-10.0	-1.25	0.684	-6.84	-0.85	0.68	1.1	+8.5																
2	4.05	1.67	-6.0	-0.45	0.874	-5.25	-0.39	0.32	0.2	+2.3																
1	4.01	1.54	-2.0	-0.05	1.102	-2.21	-0.06	4	0.0	+0.1									-2	-2.21	+4.4	+0.1				
1'	4.01	1.54	+2.0	-0.05	1.102	+2.21	-0.06	4	0.0	-0.1									-6	-6.61	-13.2	+0.3				
2'	4.05	1.67	+6.0	-0.45	0.874	+5.25	-0.39	32	0.2	-2.3									-10	-8.74	-52.4	+3.9				
3'	4.17	1.83	+10.0	-1.25	0.684	+6.84	-0.85	68	1.1	-8.5									-14	-9.57	-95.7	+12.0	-2	-1.37	-13.7	+1.7
4'	4.26	2.00	+14.0	-2.45	0.533	+7.46	-1.31	104	3.2	-18.3									-18	-9.59	-134.2	+23.5	-6	-3.20	-44.8	+7.8
5'	4.45	2.16	+18.0	-4.05	0.443	+7.96	-1.79	143	7.3	-32.2									-22	-9.75	-175.2	+39.5	-10	-4.43	-79.7	+17.9
Correct to Centroid			-4.06	-2.53	8.492	-34.49	-21.45	1714 140	174.9 54.5	+384.7 +87.0		-3.08	+108.8 +12.5	+48.5 +7.8		-15.87	+476.1 +64.4	+185.8 +40.2		-46.47	-466.3 +188.5	+79.3 +117.5		-9.00	-138.2 +36.5	+27.4 +22.8
Correct for Dissymmetry								1574 734	120.4 56.2	+297.7			+96.3 +100.4	+40.7 +18.2			+411.7 +359.2	+145.6 +77.7			-654.8 -94.2	-38.2 -123.5			-174.7 +11.4	+4.6 -33.0
				A =	8.492			I'_x =	840	64.2	= I'_y	-3.08	-4.1	+22.5		-15.87	+52.5	+67.9		-46.47	-560.6	+85.3		-9.00	-185.1	+37.6
											$\frac{P}{A}$ =	-0.363				-1.869				-5.475				-1.059		
											$V_t = \frac{M'_t}{I'_x}$ =		-0.0049				+0.0625				-0.667				-0.211	
											$h_t = \frac{M'_t}{I'_y}$ =		+0.351				+1.058				+1.328				+0.585	
											$x_t = \frac{-\frac{P}{A}}{V_t}$ =		-74.0				+29.9				-8.20				-5.03	

Computations are based on a rib-section 12 ft. wide, since $\frac{L}{I} = \frac{L}{12bd^3}$ is taken equal to $\frac{L}{d^3}$.

Since all units are in feet, E should be taken in foot units in computing the effect of shrinkage, temperature change, or abutment movements.

Computations for temperature are for a free change in span of 100%.

Temperature, (Increase) $M_x = -15$, $M_y = +60$

Correction for Dissymmetry $+148$, -2.8

$M'_t = -163$, $M'_y = +62.8$

$V = -0.016$, $H = +0.081$

FIG. 3. Unsymmetrical Arch — Computations. (See Fig. 2.)

abutment) now being known, it is easy to draw the pressure lines. By scaling the ordinate from any pressure line to the kern point for any particular cross-section and multiplying by the H value for that pressure line, we can compute conveniently the moment about that kern point. Thus we can draw influence lines if we wish, by plotting kern-point moments at various sections for different positions of the unit load. From the kern moments the stresses can be computed directly from the formula $f = M_k c/I$.

For temperature changes, the horizontal change in span if the arch were free to expand multiplied by E is $E\epsilon t^\circ \times 60$ ft., and the relative vertical movement of the abutments multiplied by E is $E\epsilon t^\circ \times 15$ ft. Omit the constant multiplier $E\epsilon t^\circ$ for the time being, and use it later as a multiplier for the temperature stresses. It has been shown that a linear displacement is analogous to a moment about the axis of displacement. Hence we have on the analogous column elastic moments $M_x = \pm 15$ and $M_y = \mp 60$. That the signs of these moments are opposite is determined by the fact that the change of span is analogous to a moment about a line connecting the ends of the arch axis.* Such a moment on the analogous column produces compression on the top and left or on the bottom and right of the section. After the line of action of the temperature thrust has been determined, the sign of the bending moment at any point is readily determined for a rise or for a fall of temperature by observing that a thrust is required to shorten the span, and a pull to lengthen it.

These moments $M_x = \pm 15$ and $M_y = \mp 60$ are now corrected for dissymmetry. The H and V components of the temperature thrust are then computed. The thrust, of course, passes through the elastic centroid, just as the neutral axis of a beam passes through the centroid for pure bending.

Symmetrical Arch. If the arch is symmetrical, the procedure just given is shortened. It is now necessary to consider only one-half of the arch ring. By inspection the product of inertia is zero and there is no correction for dissymmetry.

Figs. 4 and 5 show the analysis of an arch similar to the previous one except that the span is five panels of 16 ft. = 80 ft.

Pressure Line Due to Dead Load. In designing an arch, the axis should be made to coincide as nearly as possible with a line of pressure for the dead load, or for dead load plus live load of half intensity over the whole span. This is best done on a large-scale drawing. If the arch is spandrel-filled, the pressure line and axis can be made to coincide exactly; if the structure has open spandrels the pressure lines are

* See also footnote, page 56.

polygons (except for the load of the rib itself), and so will not exactly fit any continuous curve.

We have at hand, now, a pressure line which satisfies the laws of statics and which either exactly or very nearly satisfies the laws of geometry; it is either exactly or nearly the true line of pressure. If the axis and the pressure line exactly coincide, no further computation is needed, except for rib-shortening. If they do not exactly coincide, we may use the set of values for static moments given by the pressure line for m values for dead load in the forms shown above.* After determining the change in reactions necessary to satisfy continuity, the revised pressure line is drawn and from this all desired bending moments are computed.

The Pressure Line Theorem. The pressure line in an arch is that string polygon for the loads which most nearly fits the arch axis. Although this statement of the theorem is not precisely true, it is true for the limits within which the fit will be judged.

This is by far the most important principle in the design of arches — the pressure line must "fit" the axis. The theorem may be proved from the column analogy, and the proof illuminates the theorem, for if we can draw a string polygon which coincides with the axis, m_s will be zero throughout, which makes m_i zero, and this polygon is the true pressure line as determined by the elastic theory. If the polygon lies very near the axis, m_s is small and hence m_i is very small, and little if any change is required in the pressure line. In other words, we can, by looking at a pressure line, judge the accuracy with which the algebraic total of the moment area between the axis and polygon is zero ($P = 0$ in the column analogy) and also the accuracy with which this moment area balances about the axes of the arch ($M_x = 0$ and $M_y = 0$).

Note that the above discussion neglects rib-shortening and also the variation of the thickness of the arch rib. This involves a slight lack of precision in the statement. The statement here given is substantially that of Winkler in 1879.

Use of Influence Lines in the Analysis. Except in rare cases the construction of influence lines for use quantitatively in the analysis of concrete arches is not justified. Usually dead load stresses govern largely in the design, and the live load may be considered as uniformly distributed.

A study of any of the many sets of curves that have been published shows that the load-divides for stresses at crown or springing lie very near

* In subsequent problems the curve of static moments for dead load is taken as if half of the load were cantilevered from each abutment. This is more convenient if the analysis is to be entirely arithmetical.

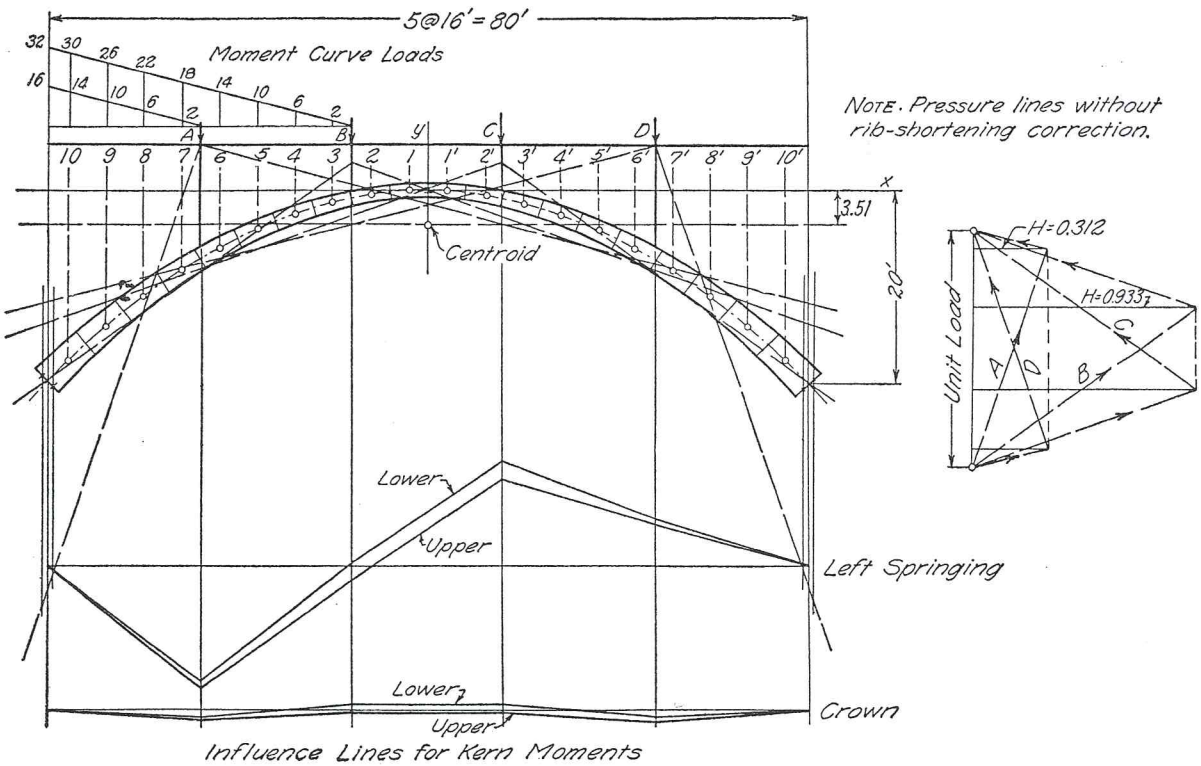

FIG. 4. Symmetrical Arch — Influence Lines. (See Fig. 5.)

Properties of the Section											Elastic Loads — Unit Load at:																
Given					Derived						A				B				C				D				
1	2	3	4	5	6	7	8	9	10	11	12	13	14	15	16	17	18	19	20	21	22	23	24	25	26	27
No.	L, ft.	d, ft	x	y	a	ax	ay	ax^2	ay^2	axy	m_s	P	M_x	M_y	m_s	P	M_x	M_y	m_s	P	M_x	M_y	m_s	P	M_x	M_y
10	5.58	3.34	-38.0	-18.05	0.150	-5.70	-2.71	2.17	49.0	Due to Symmetry, axy Totals Zero	-14	-2.10	+79.7	+37.9	-30	-4.50	+171.0	+81.2	Same as Load at B				Same as Load at A			
9	5.23	3.04	-34.0	-14.45	0.187	-6.36	-2.70	2.16	39.0		-10	-1.87	+63.5	+27.0	-26	-4.86	+165.1	+70.2			Due to Symmetry,					
8	5.00	2.79	-30.0	-11.25	0.231	-6.94	-2.60	2.08	29.3		-6	-1.39	+41.7	+15.6	-22	-5.09	+153.0	+57.2								
7	4.78	2.54	-26.0	-8.45	0.291	-7.56	-2.46	1.97	20.8		-2	-0.58	+15.1	+4.9	-18	-5.24	+136.4	+44.3								
6	4.55	2.33	-22.0	-6.05	0.361	-7.93	-2.18	1.74	13.2						-14	-5.05	+111.0	+30.5								
5	4.45	2.16	-18.0	-4.05	0.443	-7.96	-1.79	1.43	7.3						-10	-4.43	+79.6	+17.9								
4	4.26	2.00	-14.0	-2.45	0.533	-7.46	-1.31	1.04	3.2						-6	-3.20	+44.8	+7.8								
3	4.17	1.83	-10.0	-1.25	0.684	-6.84	-0.85	.68	1.1						-2	-1.37	+13.7	+1.7								
2	4.05	1.67	-6.0	-0.45	0.874	-5.25	-0.39	.32	0.2																	
1	4.01	1.54	-2.0	-0.05	1.102	-2.21	-0.06	.4	0.0																	
Left Half					4.856	-64.21	-17.05	136.3	163.1			-5.94	+200.0	+85.4		-33.74	+874.6	+310.8								
Right Half					4.856	+64.21	-17.05	136.3	163.1																	
					9.712	0	-34.10	272.6	326.2	0		-5.94	+200.0	+85.4		-33.74	+874.6	+310.8								
			0	-3.51				0	119.5				0	+20.8			0	+118.0								
				A =	9.712		I_x =	272.6	206.7	$=I_y$		-5.94	+200.0	+64.6		-33.74	+874.6	+192.8								
										$\frac{P}{A}$ =		-0.612				-3.47										
										$v_i = \frac{M_x}{I_x}$ =			+0.0734				+0.321									
										$h_i = \frac{M_y}{I_y}$ =			+0.312				+0.933									
										$x_i = \frac{A}{v_i}$ =			+8.34				+10.8									

Computations are based on a rib-section 12 ft. wide, since $\frac{L}{I} = \frac{L}{\frac{1}{12}bd^3}$ is taken equal to $\frac{L}{d^3}$.

Since all units are in feet, E should be taken in foot units in computing the effect of shrinkage, temperature change, or abutment movements.

Computations for temperature are for a free change in span of 100%.

Temperature (Increase) $M_y = +80$ $M_x = 0$ $H = +0.032$

FIG. 5. Symmetrical Arch — Computations. (See Fig. 4.)

the 3/8 point of the span. If it is desired to locate the load-divide more accurately, all that is needed is a short section of the influence line adjacent to the 3/8 point as indicated in Fig. 6. From this a correction may be deduced as shown by the area shaded, to be added to the value computed for the 3/8 load-divide.

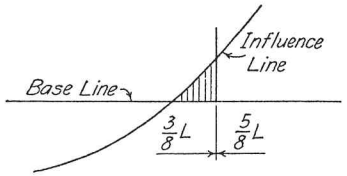

FIG. 6. Correction for Shift of Load-divide.

Considering crown moment alone, at least six different influence lines may be drawn, with as many points of load-divide — for axial moment and for kern moment upper fibers, and kern moment lower fibers, each with or without rib-shortening included. Obviously, unless the critical one is drawn for the particular fiber being investigated, the significance of precision in locating the load-divide is entirely lost.

Where desired, influence lines may be readily constructed as shown in Figs. 2 and 4. Fig. 7 shows the proximity of the load-divide to the 3/8 point for certain conditions applied to the arch later analyzed in Figs. 11 and 12.

As an illustration of the use of a short section of influence line in correcting the point of load-divide, this correction will be applied to the problem described.

The six possible cases are shown in Fig. 8. The critical one in this problem at the crown is that for the upper fiber (lower kern moment) with the rib-shortening correction, and at the springing that for the lower fiber (upper kern moment) with the rib-shortening correction. The correction, then, involves the addition of the shaded areas multiplied by the load per lineal foot. At the crown this amounts to 7 lb. per sq. in. (777 + 7 = 784), an increase of 0.9%. At the springing the correction is 9 lb. per sq. in., a 1.2% increase.

Clearly, then, elaborate influence lines are not necessary for use quantitatively with live load uniformly distributed. They lose their significance unless drawn for kern moment with or without rib-shortening according to the governing condition in the fiber investigated.

Illustrative Problem. Figs. 11 and 12 show the complete analysis of a symmetrical arch for stresses due to dead load, uniform live load and temperature change. The procedure follows that already explained for drawing influence lines. The load-divides for stress at the crown and at the springing are assumed to lie at the 3/8–5/8 point of the span. For convenience in computation, the values of m_s are computed by considering the loads as cantilevered from the nearer abutment in all cases. If, as is probable, the arch axis has been previously laid out to a large

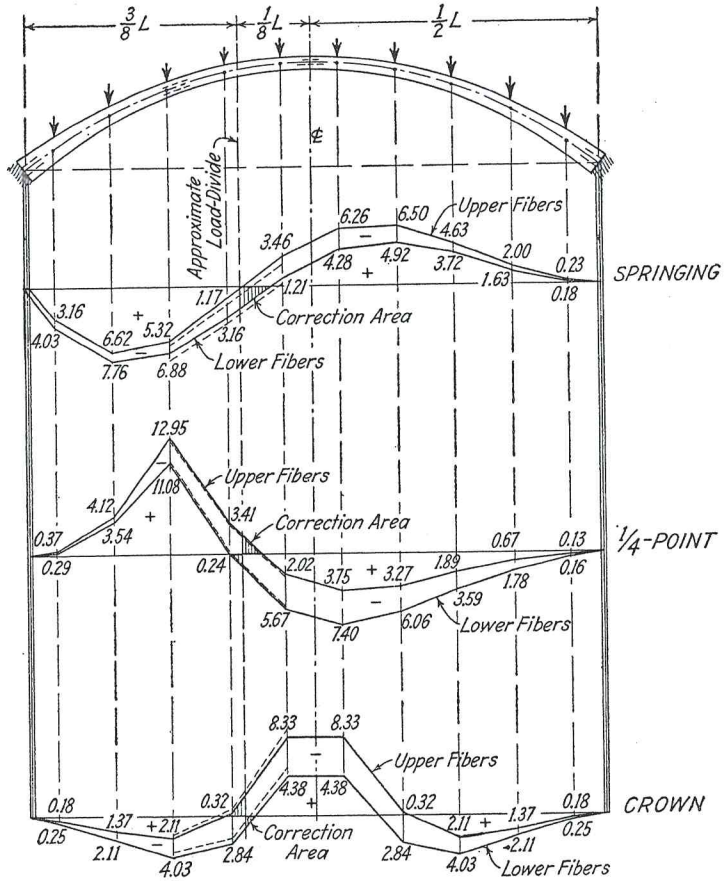

The above influence lines were plotted directly by column analogy for the arch of Fig. 11. The ordinate values given are for 1000# loads. Rib-shortening is not included except in the short segments of lines shown dotted at the 3/8 point.

FIG. 7. Influence Lines — Symmetrical Arch. (See Figs. 23 to 28.)

scale, it may be somewhat more accurate to take these values, in the cases of dead load and full live load, from a pressure line which nearly fits the arch axis. For 3/8 live load, however, such a pressure line is not convenient.

Maximum moment at the crown due to live load occurs for one of the loadings shown in Fig. 9. The crown moment for case (*a*) is twice the crown moment for 3/8 loading. For case (*b*) deduct case (*a*) from the value for full live load.

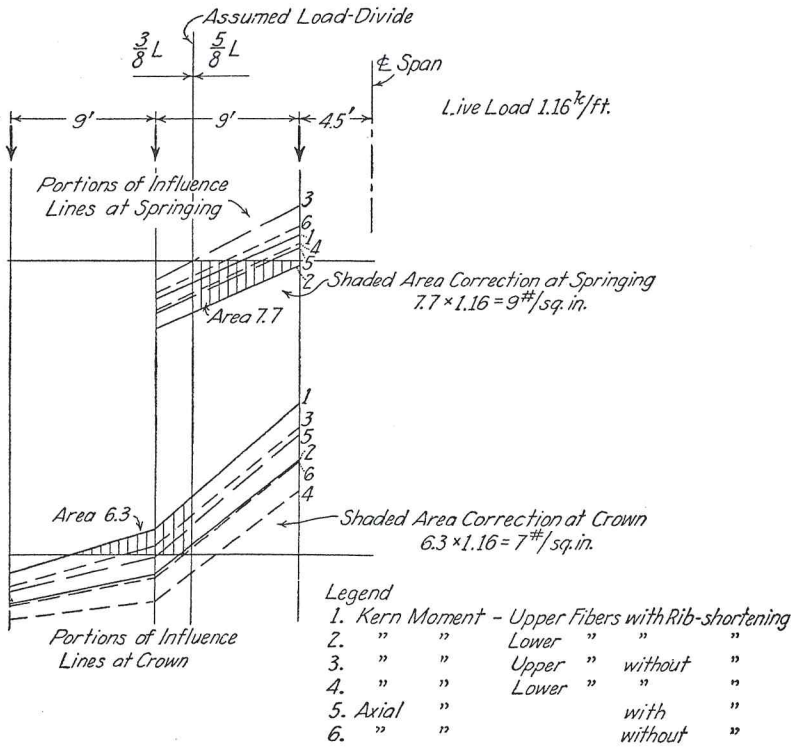

FIG. 8. Comparison of Influence Lines in Arch. (See Fig. 7.)

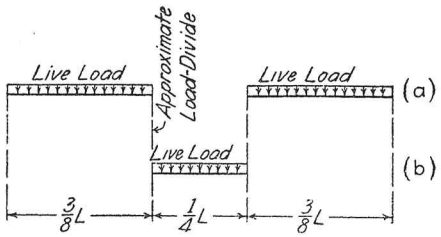

FIG. 9. Critical Loadings for Maximum Moments at Crown of Arch.

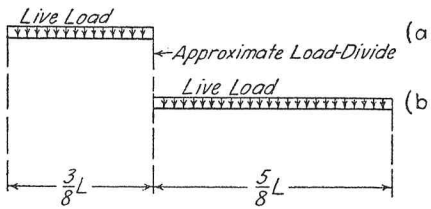

FIG. 10. Critical Loadings for Maximum Moments at Springing of Arch

Maximum moment at the springing due to live load occurs for one of the loadings shown in Fig. 10. For case (*a*) find the moment at the loaded end for 3/8 loading. The value for case (*b*) may be got by deducting that for case (*a*) from the value for full live load.

As in the construction of influence lines above, we first tabulate the known properties of the arch ring, I, Δ, x, y, and the computed values of m_s for each of the three cases of loading. Then compute a, ay, ax^2, ay^2 and the elastic loads and moments, $P(= m_s a)$, $M_x(= m_s ax)$, $M_y(= m_s ay)$. Add for totals. Correct to the centroid.

Now compute $m_i = \dfrac{P}{A} + \dfrac{M_x}{I_x}\,x + \dfrac{M_y}{I_y}\,y$ for each kern point.

Compute m_s at each kern point and find $M = m_s - m_i$.*

Note that signs are entirely automatic. Positive moment, just as in a beam, is such as sags the arch. Coordinates are positive upward and to the right.

Combine dead load, live load and temperature to give maximum moments and compute the corresponding stresses by dividing by the section modulus.

Finally correct the critical stresses for rib-shortening. This may be done directly by proportion from the temperature stresses.

The average area of vertical sections, A_{av}, having been determined, the equivalent temperature change for a given thrust may be computed from

$$\frac{H}{A_{av}}\frac{L}{E} = \epsilon t^\circ L\dagger$$

$$t^\circ = \frac{1}{E\epsilon A_{av}}\,H$$

* The pressure line should also be drawn. By inspection it can be seen whether this "hugs" closely the arch axis and so any gross blunders may be detected. If a more precise check is desired, use the moments given by the computed pressure line as m_s values and repeat the analysis. This final analysis will be more precise than the former one. It should, however, check it very closely.

† This is not quite correct for two reasons.

In the first place the change in span of the free arch ring due to compressions produced by a thrust H is $H/E\int(1/A)dx$, where A is the area of a vertical section through the rib. Now the average of the reciprocals is not equal to the reciprocal of the average $1/A_{av}$. But where the variation is not too great, the error is not serious. If greater accuracy is desired, compute the average of the reciprocals. Moreover, there is, of course, a rib-shortening due to rib-shortening. Except in extremely flat arches it is not important. In such cases it may best be got by successive approximation.

The usual method of correction for rib-shortening assumes that $1/(1 + a) = 1 - a$, which is good enough if the correction is small.

In this problem we have taken $E = 3{,}000{,}000$, $\epsilon = 0.000{,}006$, $E\epsilon = 18$.

In view of the uncertainties as to elastic modulus, effective temperature change and shrinkage, it seems futile to be very fussy about the exact amount of rib-shortening. In general we may expect $H/A_{av} =$ about 300 lb. per sq. in., and the equivalent temperature change about 15° to 20° F.

For the convenience of the reader, the separate quantities in Fig. 11 are described in detail as follows:

Arch Properties:

d = scaled depth of rib in feet normal to the axis at the centers of divisions.

I = moment of inertia in feet^4 of the cross-section of the rib at the centers of divisions. This might be taken with sufficient accuracy as $1/12\, bd^3$. The figures shown, however, include also the I of the steel angles figured as equivalent concrete ($n=15$),* that is, adding an additional $(14 \times Ad'^2 \times 4)/144 = 0.692d'^2$. Then $I = d^3/6 + 0.692d'^2$ where $d' = d/2 - 0.28$. (See sketch, Fig. 12.)

Δs = scaled length of axis of division in feet for equal horizontal lengths of 4.5 ft. The sum of this column of figures, 48.70, is the length of the half arch axis and should be checked by independent scaling.

x = lever arm to the center of division along the preliminary X axis through the crown point of the arch axis.

y = lever arm (scaled) along Y axis through the crown point.

a = elastic areas or $\Delta s/I$ values, E being omitted because it is constant.

ay = moment of the elastic areas along the Y axis.

From the summation thus found the centroid of the elastic section is located as $y_c = 51.41/14.06 = 3.65$ ft. below the crown point.

$\sum ax^2 = I_x$ = moment of inertia of the elastic areas along the X axis.

$\sum ay^2 = I_y$ = moment of inertia along the Y axis with reference to the preliminary axis of X through the crown point.

Dead Load:

m_s = static cantilever moment at the centroids of sections due to the loads shown in the figure.

$P = \sum m_s a$ = elastic loads on the column section.

$M_y = \sum m_s ay$ = moment of these elastic loads along the Y axis — i.e., about the preliminary axis of X through the crown point.

* Based on 2000 p.s.i. concrete with $E = 3{,}000{,}000$ p.s.i. for temperature and shrinkage. See pages 311–3.

Live Load:

The live load is determined for unit values at the load points. This assumes either uniform live load or an equivalent uniform load. The method, however, is applicable to any sort of load system.

For the 3/8 live load the arch is loaded with a uniform live load of unit value per panel, extending out 3/8 of the span, or 33.75 ft. from the springing. This happens to coincide with point 8 in this problem, giving a slight load (0.03) at the load point nearest the center.

The moments and elastic loads are computed exactly as for dead load. Since the 3/8 loading is unsymmetrical it is necessary to compute static moments along both axes.

The signs are consistent with the usual conventions and are indicated in the column headings.

The total elastic area is +14.06 for the half axis and for the full axis $A = +28.12$. $I_x = +13150$; the vertical axis does not shift, and $y_c =$ 3.65 ft. The I_y correction is

$$14.06 \times 3.65^2 = +187.3$$

and is subtracted from +407.4, the ay^2 summation about the preliminary X axis. The corrected total is $I_y = +440.2$.

Next correct the moments of the loads about the horizontal axis.

The remaining tabulation is convenient for computing the indeterminate moment in the form

$$m_i = \frac{P}{A} + \frac{M_x}{I_x}x + \frac{M_y}{I_y}y$$

The kern points of the cross-sections at crown and at springing are calculated from the relation

$$e_k = \frac{I}{Ac} = \frac{2.14}{5.03 \times 1.08} = 0.4 \text{ ft. at crown}$$

$$e_k = \frac{16.75}{9.49 \times 2.20} = 0.8 \text{ ft. at springing}$$

with coordinates at the springing of 0.66 ft. vertical and 0.46 ft. horizontal.

In Fig. 12 the coordinates of the kern points with respect to the elastic centroid are indicated at crown and springing, and the kern moments are found as $M = m_s - m_i$ for dead load, for 3/8 live load and for full live load. From the kern moments the fiber stresses follow from the formula $f = Mc/I$. A positive value of M represents compression in the upper fibers (lower kern moment) and tension in the lower fibers (upper kern moment). The multiplier, converting to pounds per square inch, is 3.51 for dead load at crown and 0.91 at springing.

ARCH PROPERTIES										LOADS									
GIVEN						DERIVED				DEAD			UNIT LIVE-$\frac{3}{8}$				UNIT LIVE-FULL		
Point	d ft.	I ft^4	Δs ft	x −	y −	a +	ay −	ax^2 +	ay^2 +	m_s −	P −	M_y +	m_s −	P −	M_x +	M_y +	m_s −	P −	M_y +
1	3.85	11.36	5.65	42.75	14.60	0.50	7.26	915	106.0	2821	1410	20600	55.98	28.0	1197	409	101.25	50.6	739
2	3.20	6.67	5.35	38.25	11.65	0.80	9.35	1171	108.9	2243	1795	20900	41.35	33.1	1265	386	81.00	64.9	755
3	2.85	4.76	5.11	33.75	8.95	1.07	9.60	1219	85.9	1738	1860	16650	28.95	31.0	1058	278	63.00	67.4	604
4	2.68	3.99	4.92	29.25	6.60	1.23	8.13	1051	53.7	1298	1597	10520	18.83	23.2	680	153	47.25	58.1	384
5	2.56	3.49	4.78	24.75	4.65	1.37	6.37	839	29.6	925	1270	5900	10.95	15.0	371	70	33.75	46.2	215
6	2.45	3.07	4.68	20.25	3.15	1.53	4.81	627	15.2	615	941	2970	5.33	8.2	166	26	22.50	34.4	108
7	2.35	2.71	4.61	15.75	1.90	1.70	3.23	422	6.1	368	626	1190	1.95	3.3	52	6	13.50	23.0	44
8	2.28	2.49	4.56	11.25	0.95	1.83	1.74	231	1.7	183	335	320	0.20	0.4	4	1	6.75	12.4	12
9	2.22	2.30	4.53	6.75	0.37	1.97	0.73	90	0.3	61	120	40	0.07	0.1	1	0	2.25	4.4	2
10	2.18	2.19	4.51	2.25	0.09	2.06	0.19	10	0.0	0	0	0	0	0	0	0	0	0	0
Totals		48.70				+14.06	-51.41	+6575	+407.4		-9954	+79090		-142.3	+4794	+1329		-361.4	+2863
Correct to Centroid			-3.65						+187.3			+36330				+519			+1319
Corrected-Half Arch									+220.1			+42760							+1544
Totals-Full Arch					A=	+28.12		I_x=	+13150 +440.2=	I_y	-19908	+85520		-142.3	+4794	+810		-722.8	+3088
										$\frac{P}{A}$	-708			-5.06				-25.7	
										$v_i=\frac{M_x}{I_x}$				+0.364					
										$h_i=\frac{M_y}{I_y}$	+194.3			+1.84				+7.01	

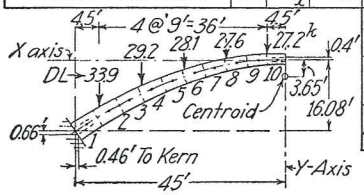

FIG. 11. Arch Analysis — Uniform Live Load. (See Fig. 12.)
For Influence Lines, See Figs. 7, 8. For Design, See Figs. 23 to 28.

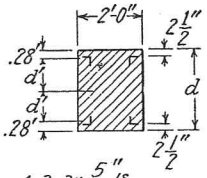

4-3×3×$\frac{5}{16}$" LS

SECTION OF RIB

LL=10.4^k per panel

Temperature, −
$t°=\pm 40°$
$\epsilon E = 18$

$H_t = \frac{\epsilon E t° L}{I_y}$
$= \frac{18\times 40\times 90}{440.2}\times 144 = 21.2^k$

Rib-Shortening and Shrinkage

Equivalent $t° = -15°$
$\frac{15}{40} = 37\frac{1}{2}$ %

				Dead Load	Live Load $\frac{3}{8}$	Live Load Full	Live Load $\frac{5}{8}$	Live Load $\frac{1}{4}$	Live Load $\frac{3}{8}$, $\frac{3}{8}$	Temperature	Rib-Shortening and Shrinkage	Total Fiber Stress
CROWN	Upper Kern	$x=0$, $y=+4.05'$	m_s	0	0	0				$H_t=21.2^k$	$t°=-15°$ $=37\frac{1}{2}$%	#/□"
		$c=1.08'$ $I=2.14'^4$	m_i	-708	-5.06	-25.7						
		$\frac{1.08}{2.14}\times\frac{1}{.144}=3.51_{DL}$		+787	+7.45	+28.4						
				+ 79	+2.39	+ 2.7						
			M	- 79	-2.39	- 2.7				±85.9		
		do × 10.4 = 36.5_{LL}	f_L	-277	-87	-98	—	+76	-174	±301	+113	-639
	Lower Kern	$x=0$, $y=+3.25'$	m_s	0	0	0						
		$c=1.08'$ $I=2.14'^4$	m_i	-708	-5.06	-25.7						
				+631	+6.00	+22.8						
		Multiplier 3.51_{DL}		- 77	+0.94	- 2.9						
		Multiplier 36.5_{LL}	M	+ 77	-0.94	+ 2.9				± 68.9		
			f_u	-270	+34	-106	—	-174	+68	±242	-91	-777
SPRINGING	Upper Kern	$x=-45.46'$ $y=-11.77'$	m_s	-3217	-66.1	-114.8						
		$c=2.20'$ $I=16.75'^4$	m_i	- 708	- 5.06	- 25.7						
		$\frac{2.20}{16.75}\times\frac{1}{.144}=0.91_{DL}$		-2287	-16.55	-82.6						
					-21.66							
				-2995	-43.3	-108.3						
		do × 10.4 = 9.46_{LL}	M	- 222	-22.8	- 6.5				±249		
			f_L	- 202	-215	-61	+154	—	—	±227	-85	-729
	Lower Kern	$x=-44.54'$, $y=-13.09'$	m_s	-3083	- 62.7	-110.7						
			m_i	- 708	- 5.06	- 25.7						
				-2543	-16.24	-91.8						
		Multiplier 0.91_{DL}			-24.09							
		Multiplier 9.46_{LL}		-3251	-45.4	-117.5						
			M	+ 168	-17.3	+7.3				±277		
			f_u	-153	+16.3	-69	-232	—	—	±252	+104	-558

FIG. 12. Maximum Stresses for Arch from Fig. 11.

The live load computations to this point are on the basis of a unit load per foot. The actual live load is 10.4^k per panel, giving the multipliers shown in the figure. The fiber stresses for other live load conditions follow as shown in Figs. 9 and 10, or from the sketches of the influence lines as seen in Fig. 12. Thus, at the crown — upper kern — writing fiber stresses for total areas, we have $2 \times (-87) = -174$ for the two negative areas and -98 for the total area, leaving $+76$ for the center positive area.

The temperature stresses are shown for a change of $\pm 40°$, and the rib-shortening and shrinkage stresses are included for an equivalent drop in temperature of 15°. Fig. 22 (*b*), (page 311) shows the effect of rib-shortening alone, on the crown and springing moments in the arch.

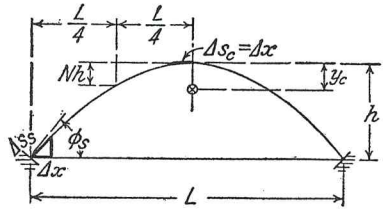

FIG. 13. Arch Characteristics as Given by Whitney.

Approximate Formulas for Arch Analysis. The arch with parabolic axis and with $(ds)/I$ constant and equal to $(dx)/I_c$ gives simple mathematical expressions for its properties. Such an arch is relatively much thinner at the springing than is customary in bridge arches and in most bridge arches the axis is not parabolic; nevertheless such arches furnish a basis for generalized expressions for arch properties.

For such arches we may readily derive (see Fig. 17, page 304)

$$A = \int \frac{ds}{EI} = \frac{1}{EI_c}\int dx = \frac{L}{EI_c}$$

$$y_c = \frac{\int y \frac{ds}{EI}}{\int \frac{ds}{EI}} = \frac{h}{3}$$

$$I_x = \int x^2 \frac{ds}{EI} = \frac{1}{12} A L^2$$

$$I_y = \int y^2 \frac{ds}{EI} = \frac{4}{45} A h^2 = \text{approx. } \frac{1}{12} A h^2$$

Crown thrust for full uniform load W, $\quad H = \frac{1}{8} W \frac{L}{h}$

For a study of influence lines in this connection see Chapter VIII.

In a valuable paper "Design of Symmetrical Concrete Arches," Trans. Am. Soc. C. E., Vol. 88 (1925), Mr. Charles S. Whitney has

derived influence lines, values of maximum moments due to live load and elastic properties for a wide range of arches of certain selected forms. The arch axes are a family of curves each defined by the

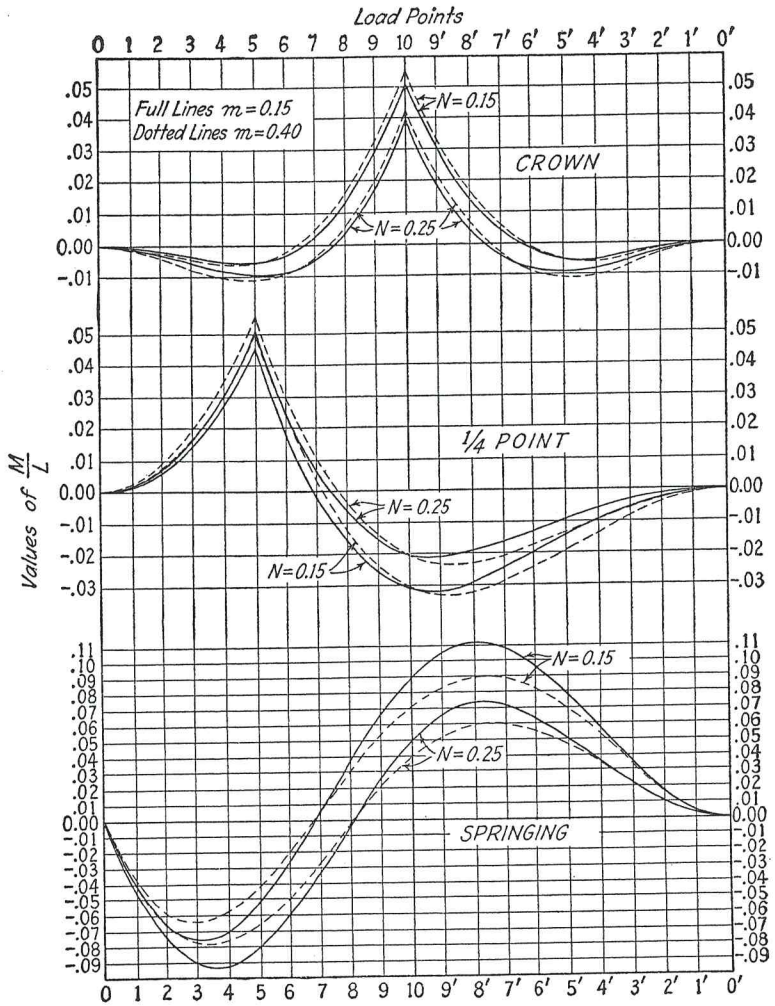

FIG. 14. Influence Lines for Moments — After Whitney.

parameter N, and the variation of depth along the axis is defined by a parameter m. These parameters are defined as follows (Fig. 13):

Shape coefficient N = ratio of the drop of the arch axis at the quarter point to the rise of the arch, h.

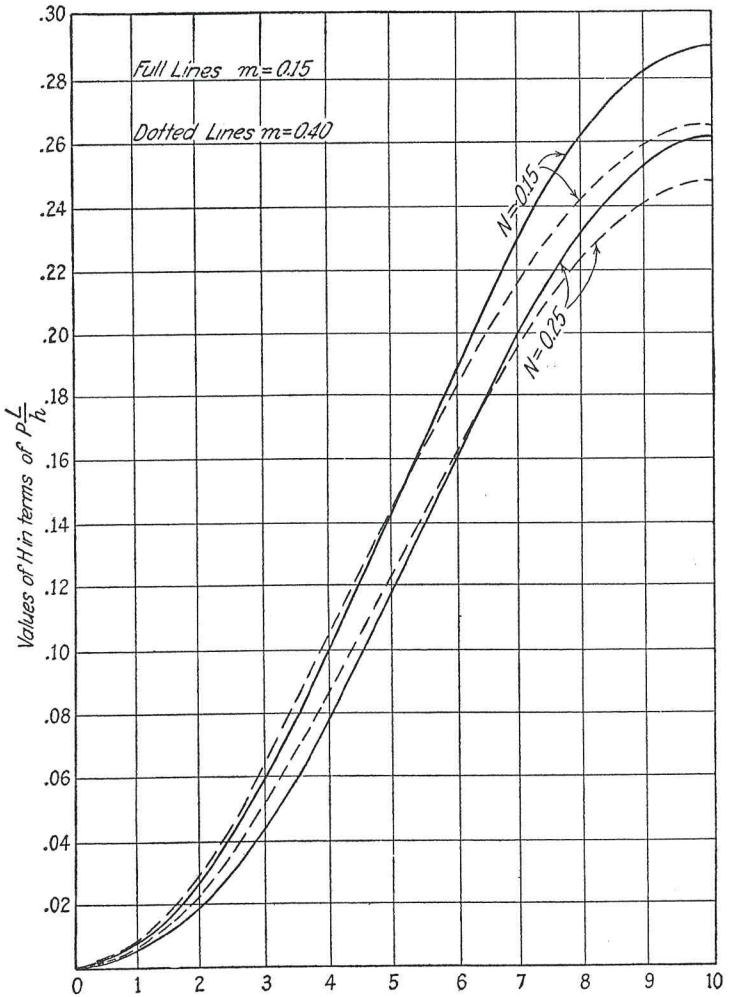

FIG. 15. Influence Lines for Crown Thrust — After Whitney.

$$\text{Form coefficient} \quad m = \frac{\Delta s/I \text{ at the springing}}{\Delta s/I \text{ at the crown}} \text{ for the same } \Delta x$$

$$= \frac{\Delta s_s/I_s}{\Delta s_c/I_c} = \frac{\Delta x/\cos\phi_s}{I_s} \cdot \frac{I_c}{\Delta x} = \frac{I_c}{I_s} \sec \phi_s.$$

y_c = distance from the crown to the horizontal neutral axis.

The values used by Mr. Whitney for the shape factor cover a range from $N = 0.15$ to $N = 0.25$. The latter is the relative drop at the

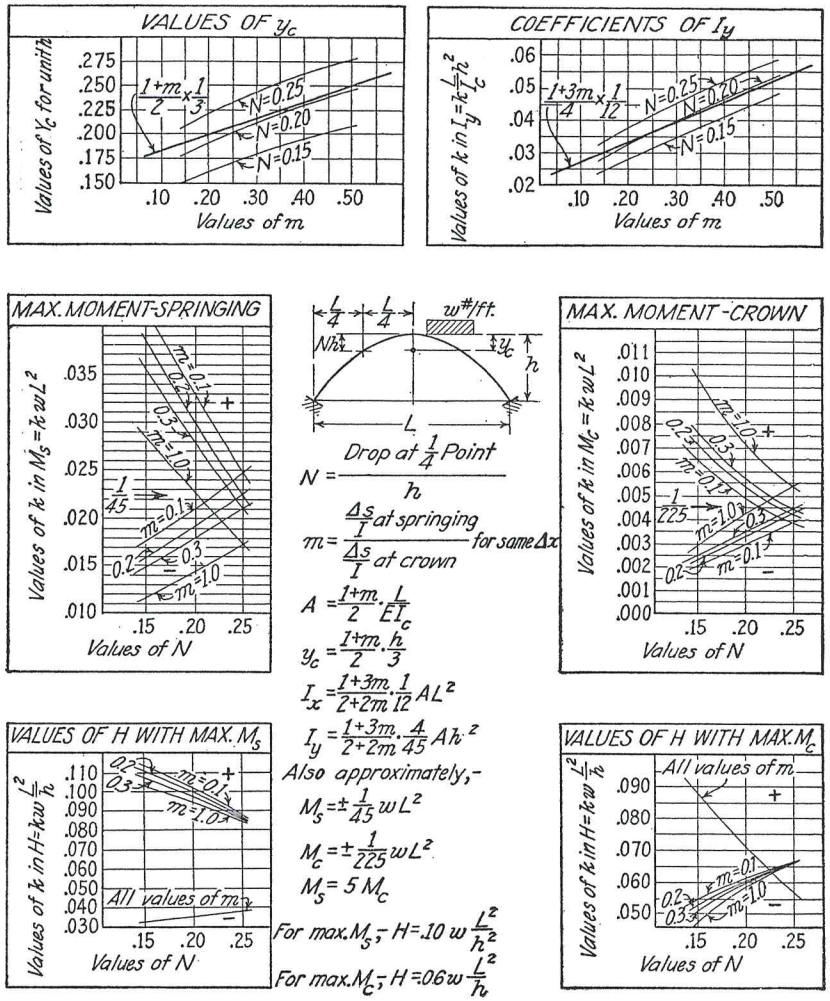

FIG. 16. Approximate Constants for Arches.

quarter point for a parabola. The arches used by him, therefore, lie above a parabola, as, for bridge arches, they should.

Mr. Whitney's values for the form coefficient vary from $m = 0.15$ to $m = 0.40$. These represent arches having depths at the springing of 1.5 to 2.0 times that at the crown. If $(ds)/I$ is constant, $m = 1.0$.

Fig. 14 shows influence lines for moments at crown, springing and quarter point, and Fig. 15 influence lines for horizontal thrust, from Mr. Whitney's paper. The values in Fig. 16 are compiled from data

in his paper. In some cases they are slightly approximate on account of the omission of the variable m where its effect is small. Formulas deduced either from the paper or from these curves are given in Fig. 17. See also Fig. 31.

APPROXIMATE FORMULAS (BASED ON PARABOLIC CASE) WITH MULTIPLIERS FOR AVERAGE ARCHES

$$A=\int\frac{ds}{EI}=2\int_0^{L/2}\frac{dx}{EI_c}=\frac{L}{EI_c}\left(\text{Multiplier }\frac{1+m}{2}\right)$$

$$y_c=\frac{2\int\frac{ds}{EI}y}{A}=\frac{2\int_0^{L/2}\frac{dx}{EI_c}h\left(\frac{x}{\frac{L}{2}}\right)^2}{\frac{L}{EI_c}}=\frac{8h}{L^3}\frac{L^3}{24}=\frac{h}{3}\left(\text{Multiplier }\frac{1+m}{2}\right)$$

$$I_x=\int\frac{ds}{EI}x^2=2\int_0^{L/2}\frac{dx}{EI_c}x^2=\frac{1}{12}\frac{L^3}{EI_c}=\frac{1}{12}AL^2\left(\text{Multiplier }\frac{1+3m}{2+2m}\right)$$

$$I_y=\int\frac{ds}{EI}y^2=2\int_0^{L/2}\frac{dx}{EI_c}h^2\left(\frac{x}{\frac{L}{2}}\right)^4=A\frac{h^2}{9}=\frac{4}{45}Ah^2\left(\text{Multiplier }\frac{1+3m}{2+2m}\right)$$

Temperature

$$H_t=\frac{\epsilon Et^oL}{I_y}=\frac{\epsilon Et^oL}{\frac{4}{45}\frac{L}{I_c}h^2}=\frac{45}{4}\epsilon Et^o\frac{I_c}{h^2}=\text{Approx. }200t^o\frac{I_c}{h^2}\left(\text{Multiplier }\frac{4}{1+3m}\right)$$

$$M_c=H_ty_c=\frac{45}{4}\epsilon Et^o\frac{I_c}{h^2}\cdot\frac{h}{3}=\frac{15}{4}\epsilon Et^o\frac{I_c}{h}=67.5t^o\frac{I_c}{h}\left(\text{Multiplier }\frac{2+2m}{1+3m}\right)$$

$$\left(\begin{matrix}\text{Approximately-}\\ \text{Reinforcement neglected}\end{matrix}\right)f_t=\frac{M_cy}{I}=\frac{15}{4}\epsilon Et^o\frac{I_c}{h}\cdot\frac{d}{2I_c}=\frac{15}{8}\epsilon Et^o\frac{d}{h}$$

$$=\text{Approx. }33t^o\frac{d_c}{h}\left(\text{Multiplier }\frac{2+2m}{1+3m}\right)$$

$$=\text{Approx. }1350\frac{d_c}{h}\text{ for }40^o\text{ Change in }t^o$$

FIG. 17. Approximate Constants for Arches.

Study of these curves and formulas brings out some very important relations, as follows:

(*a*) The load-divides are affected very little by the shape or form of the arch.

(*b*) The variation in shape is more important than the variation in form.

(*c*) Values for A and for I_x are approximately the same as for beams of uniform section, $L/(EI)$ and $\frac{1}{12}(L/EI)L^2$, but the values of y_c and of I_y vary considerably both with the shape and with the form.

(*d*) Coefficients for maximum live load moment at both springing and crown vary considerably with both form and shape; average values are approximately

At crown $M_c = \frac{1}{225}wL^2$

At springing $M_s = \frac{1}{45}wL^2$

These coefficients are independent of the rise ratio.

(*e*) The principal factor in determining temperature stresses is the ratio of the thickness of the arch to the rise; for a given type $f_t \propto d/h$.

(*f*) The dead load stress for a given rib section and given loads varies approximately directly as L^2/h. It should also be evident that for any arch of a given type, rise and span the intensity of stress due to the weight of the rib itself is nearly independent of the size of the rib.

(An approximate value is

$$f_c=\frac{1}{8}\frac{A\frac{L}{h}L}{A}=\frac{1}{8}\frac{L^2}{h}\text{, where } L \text{ and } h \text{ are in feet).}$$

All the above relations are very important in design.

B. Design

The term "arch" has both an architectural and a mechanical meaning. Any member having its axis curved upward is sometimes called an arch, and the novice is apt to think that such members are strong and economical because of such "arch" action. In a mechanical sense the arch differs from a beam in that it has horizontal as well as vertical forces acting at its ends (Fig. 18). If the abutments yield so that these horizontal forces are relieved the arch becomes a beam. No engineer would design a concrete beam having a length of 100 ft. and a depth of 2 ft., but an arch with poor foundations would be the equivalent of such a beam.

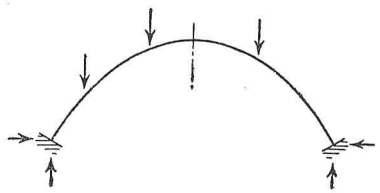

FIG. 18

The arch is a suitable structure for supporting fixed loads because the arch axis can be shaped to correspond to the equilibrium polygon for the loads, eliminating most of the bending moment. The equilibrium polygon for any loading is called the linear arch. Some bending is produced even in the linear arch by rib-shortening.

The arch is a desirable structure where it has unyielding abutments and carries a relatively small live load. If the abutments yield, it is usually not economical. If the live load is relatively great compared with the dead load it is likely to prove uneconomical and probably also subject to serious vibration.

Before considering in detail the design of concrete arches, it is well to form some idea of the relative cost of the parts which constitute the structure. The cost of the deck and its accessories such as handrails and posts is entirely independent of the design of the arch rib itself. The cost of the foundations is practically independent of the design of the arch rib in arches of single span and the cost of foundations and piers is nearly independent of the design of the arch rib in multiple-span arch series.

We may expect the relative cost of these three elements of the structure to be roughly as follows:

Foundations	40%
Deck	30%
Ribs	30%

These values will vary considerably with different structures and so are to be taken with a wide margin.

Furthermore, the cost of forms and staging and the rentals on equipment are also largely independent of the design of the arch ribs. This gives a total of 10% to 20% of the cost of the structure in which economy may be had by more refined design of the arch ribs.

Now the forces produced by dead load are practically certain, and if we neglect for the present the effect of rib-shortening, the size of arch rib required to support the dead load is a minimum when the arch axis is a string polygon for dead load. Any economies which may result from great refinements in analysis or design, then, are possible only in connection with stresses produced by rib-shortening, temperature changes, shrinkage and with those produced by flexure due to live load. Only about 5 to 10% of the total cost is thus under control.

Suppose we have an arch rib 4 ft. wide and 2 ft. deep so designed for maximum compression of 800 lb. per sq. in. that there exists

	Lb. per sq. in.
Stress due to dead load	400
Stress due to live load compression	50
Stress due to live load flexure	200
Stress due to flexure from rib-shortening, shrinkage and temperature change	150
	800

Suppose further that in some way we can eliminate half of the flexural stress. We may now reduce the depth of rib about 15% and maintain the same total fiber stress. We might thus effect an economy of 1 to 2% in the total cost of the structure. The actual possible economy is normally much less than 1% of the total cost. Of course, such a saving — any saving — in cost is worth while, but it is well to have some scale on which to base a judgment of the importance of the matter. The same saving in the total cost may be got by increasing the working stress from 800 lb. per sq. in. to perhaps 825 lb. per sq. in. or by increasing the allowable foundation pressure from, say, 3 tons per sq. ft. to 4 tons per sq. ft. Important economies, then, are to be sought in the design of the foundations and deck, and in the methods and materials of construction.

In concrete arches of very long span for highway loading such as have been built in Europe, the relative importance of the live load is small. Careful studies are worth while in such cases to reduce as far as possible the flexure due to rib-shortening, to shrinkage and to changes of temperature.*

As regards dependability, the arch ranks very high if foundations are suitable. The authors know of no case of failure or obvious overstress of a right arch except when accompanied by foundation failure. Cases of poorly designed foundations and of unsatisfactory floor construction, however, may be found.

Choice of Type and Form. Two general types of bridge arches are to be considered: (1) spandrel-filled, (2) open-spandrel. The spandrel-filled arch has distinct advantages for short spans and low spandrels, and is indicated for short spans with heavy live loads. For deep spandrels, or span lengths above 100 ft. even with moderate rise, the dead load due to the great weight of fill may become excessive. The filled spandrels probably have some advantage in railroad bridges in reducing impact and vibration.

The open-spandrel type usually consists of two or more separate arch ribs, although a solid curved slab may be used. The floor loads are then applied to the arch ring through the spandrel posts in the usual deck type of construction, or by means of hangers where the topography makes through construction preferable. The spacing of the posts in the spandrels is a matter for separate investigation, involving, in addition to esthetic considerations, the relative economy of the stringers as compared with floor beams and posts. Where separate ribs are used

* The reader is referred to Jour. of A.C.I., March, 1932, for "Progress Report on Limitations of the Theory of Elasticity," by Charles S. Whitney, author-chairman. See also "Reduction of Deformation Stresses in Fixed Concrete Arches" by J. F. Brett, Jour. West. Soc. Engrs., September, 1926.

to make up the ring they should be adequately braced transversely by cross struts.

Design of the arch ring involves a study of the shape of the axis, of the variation in thickness along the ring and of the ratio of the rise to the span length of the arch. These are in turn related to the character of the loading, the type of spandrels and the characteristics of the spanned opening. After all these factors have been studied, esthetic principles will usually suggest changes of form or even an entire change of type. The structure should be simple in detail, pleasing in outline and in harmony with its surroundings. An arch is generally poorly designed if it is not beautiful, since it lends itself naturally to esthetic treatment without added expense.

In many cases the rise ratio is pretty well fixed by the clearance requirements. It will usually be made as great as possible, since both the dead load thrust and the temperature moment decrease with increased rise.

Thickness of the Arch Ring. In general, economy in the arch rib is indicated by securing minimum crown thickness. In any span it is economical of material to throw the dead load toward the abutments; advantages are evident in savings in falsework and labor in placing material. Thinner crowns result in lower temperature stresses and usually in more artistic lines.

For arches of long span the proportions of the rib require considerable study. For shorter arches slight economies in the arch ring have a minor effect on the cost of the entire structure. In general, the thickness along the ring will increase only slightly to the haunch and then more rapidly toward the springing, where it will usually be from $1\frac{1}{2}$ to $2\frac{1}{2}$ times as great as at the crown.

Various empirical formulas have been proposed for estimating the thickness of the arch ring, but none are very satisfactory. The best method is to make an approximate computation of the section required at crown and springing and from these sketch in curves that are pleasing to the eye.

Having first decided on the type and form of arch, and roughly designed the floor system, a fair estimate can be made of the dead load. With the loads known, the section at the crown and springing can be estimated by trial, using the approximate formulas of Fig. 19. In the absence of other specifications an allowable stress of 800 lb. per sq. in. for 2000-lb. concrete* is recommended, of which one-half or 400 lb. may

* Concrete with an ultimate strength of 2000 lb. per sq. in. is a little out of date, but to many engineers it still furnishes a good basis for general relations. The arch designed in Figs. 23–28 was actually built about ten years ago under specifications calling for 2000-lb. concrete.

be allowed for dead load with proportionate values for higher ultimate strengths.

In the formula for thrust (Fig. 19), W is the total dead load assumed uniformly distributed. The crown thrust H_c is found for the condition of zero moment at the crown and springing. In a spandrel filled arch, or in other cases where the dead load is not approximately uniformly distributed, the coefficient 1/8 could be modified accordingly, taking moments about the crown as in any three-hinged arch. For a known width of rib (corresponding to the loads assumed), say 1 ft., the crown depth in inches is approximately $d_c = H_c/(12 \times 400)$. Using a suitable figure of approximately this depth the stresses due to live load, temperature and rib-shortening can be computed, and if the total differs much from the allowable value, the trial depth should be changed accordingly.

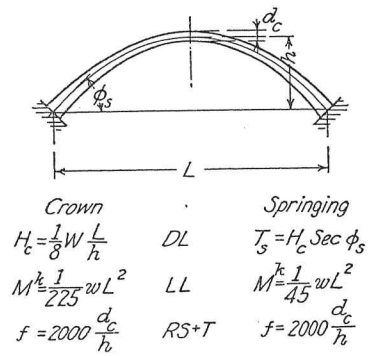

Fig. 19. Approximate Maxima for Arches.

In the formula for live-load moment, w is the intensity of loading per unit of length L, and M^k is the moment at the kern point of the section. From it the fiber stress follows in rectangular sections as $f = 6M^k/Ad$.

The depth at the springing is obtained in the same way, T_s being the thrust normal to the skewback. The temperature stresses are assumed the same at crown and springing. For arches of moderate rise, rib-shortening stresses will be included in the values given.

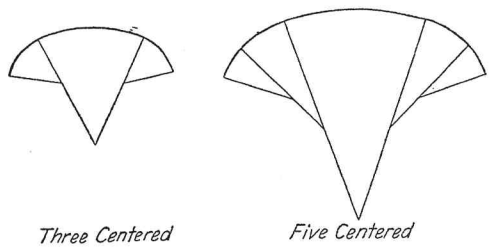

Fig. 20. Three-centered and Five-centered Arches.

With the depth of rib at crown and springing estimated and the shape of axis approximately determined as later explained, the variations in the thickness along the axis can be sketched by eye for the preliminary trial. Generally the increase in thickness at the quarter point will be somewhat less than one-fourth of the total increase. Note in this connection that variations in thickness of the arch ring have little effect on the moments, whereas variations

in shape of the axis make considerable difference in the results. For flat arches, small inaccuracies of construction, amounting to say 1/4 or 1/2 in. vertically may give errors as high as 10 or 15% in the moments. The curves for the intrados as finally selected can usually be closely approximated as circular arcs, using either three or five centers as shown in Fig. 20.

Shape of the Arch Axis. In studying the arch axis it is important to be able to visualize the relations of equilibrium polygons to load systems. The rate of change of slope of the curve per horizontal foot is propor-

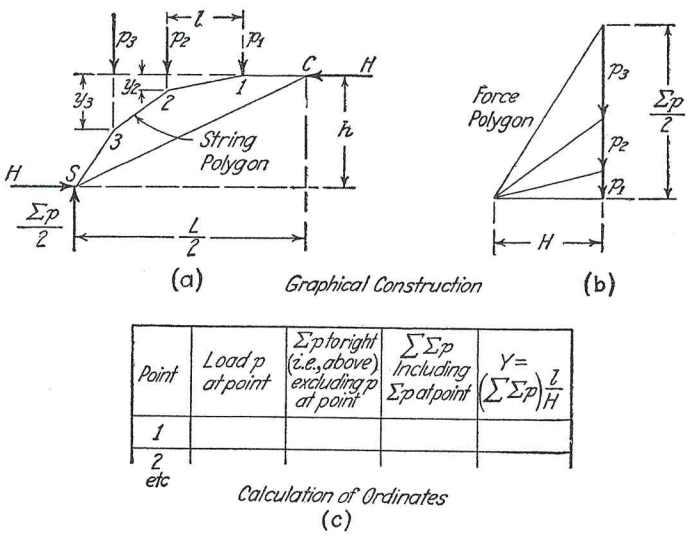

FIG. 21. Analysis for Shape of Arch Axis.

tional to the intensity of vertical load per foot. Fig. 21 shows methods of finding the appropriate shape of the axis.

The curve of equilibrium for loads uniformly distributed horizontally is, of course, a parabola. Hence, a parabolic arch for uniformly distributed load is subject only to compressive stresses if rib-shortening is neglected. An elliptical arch, then, is appropriate for relatively heavy loads near the abutments; a triangular arch (A-frame) for central concentrated load. The geostatic arch of Rankine is of interest in this connection, being the curve of equilibrium for active earth pressure as given by his theory and hence appropriate for tunnel arches. For any condition of loading, the appropriate curve of equilibrium can be determined either directly or by a few simple sketches. The use of a shape

of arch axis not suited to the loading is structurally unsound and esthetically unsatisfactory.

Owing to the relatively greater dead load at the springings, the string polygon for dead load will usually fall outside the parabola along *a–b–c–d–e*, as indicated in Fig. 22 (*a*). The effect of rib-shortening (the horizontal shortening of the axis due to thrust) is to produce positive moment at the crown and negative moment at the springing, as indicated in (*b*).

If economy lies in a minimum crown thickness, the positive effect of the rib-shortening moment at the crown may be counteracted by bringing the arch axis under the *DL* curve in the haunches, as shown in (*c*), producing an initial negative dead load moment at both crown and springing, in conformity with the pressure line theorem. The arch axis then, for arches of moderate rise, should lie between the dead load polygon and a parabola. This is usually accomplished by giving the axis the shape of the string polygon for dead load plus live load of half intensity over the entire arch.

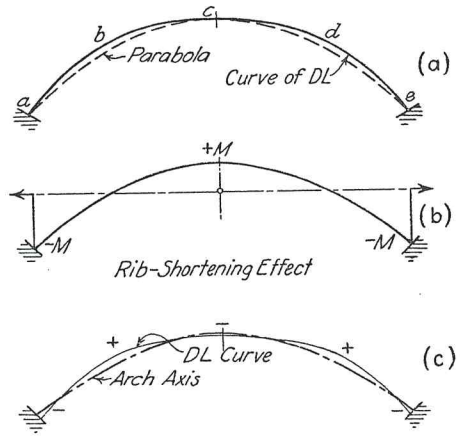

FIG. 22. Axis for Reduction of Rib-shortening Moment at Crown.

For very flat arches, an axis following more closely the curve of dead load alone will tend to reduce the section at the springing, but such arches require careful study for the best solution. Evidently rib-shortening stresses cannot be eliminated by changing the shape of the axis. The effect of rib-shortening can be counteracted at the crown or at the springing, but not completely at both.

Temperature Effects. Temperature and rib-shortening stresses become of particular importance in arches of low rise ratios. A 40° temperature range either way from an arbitrary mean is common, although this obviously deserves careful study in different localities.

Temperature stresses are caused by restraint to free deformation and are therefore dependent upon the modulus of elasticity. A rise in temperature raises the crown, producing negative moment there and positive moment at the springings; a drop in temperature has the opposite effect. Plastic flow or time yield in the concrete becomes of

importance in considering temperature effects as it bears directly on the value of E. It is necessary to distinguish somewhat between changes that occur within, say, a month, and those that are slow or seasonable.

ILLUSTRATIVE PROBLEM
DESIGN OF A SYMMETRICAL REINFORCED-CONCRETE ARCH

(1) GIVEN DATA
- Highway Loading – 20 Ft. Clear Roadway
- R.C. Surfacing – No walks.
- L.L. + I 116 #/sq.ft. – Temperature Change 40°;
- $n = 15$; $f_c = 800$ #/sq.in.

(2) PROFILE – TENTATIVE ARCH

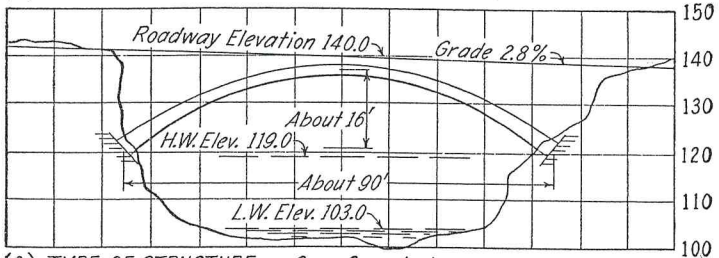

(3) TYPE OF STRUCTURE – Open Spandrel

(4) FLOOR AND SPANDRELS –

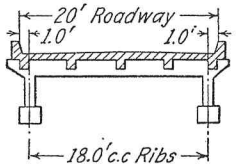

Two Ribs – 24" wide – 18'-0" c-c.
Posts 18" × 18" spaced longitudinally 9 ft. c-c.
Average D.L. of floor and spandrels per ft. of one rib = 2200 #/ft. (estimated)

Rib	600
Total D.L.	2800 #/ft.

(5) RISE RATIO – About $\frac{16}{90} = \frac{1}{5.6}$

(6) DEPTH OF ARCH RING –

Assuming 3-hinged, –

$$H_c = \frac{1}{8} \times \frac{2800 \times 90^2}{16} = 178000\#$$

At 350 #/□" $A = \frac{178000}{350} = 510$ □" at crown

For D.L. assume rib { 2' × 2' at crown; 2' × 4' at springing

Combining the weight of this section with that of the floor and spandrels the calculated dead load will be as indicated. $f_{rib} = \frac{1}{8}\, 5.6 \times 90 = 60$ #/□"

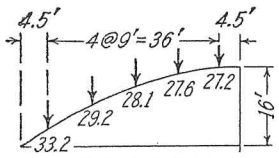

Calculated D.L.

FIG. 23. Arch Design — Figs. 23 to 28.

The Central States have a monthly variation of air temperature of about 60° Fahr. superimposed on a slow seasonal variation of about 60° Fahr. in both air and concrete. The monthly variation is probably too rapid for the plastic yield of the concrete to affect the results materially. For the seasonal changes, however, plastic yield equivalent to a reduction

in elastic modulus to perhaps one-third its normal value is not improbable.

A reasonably conservative value for E may be taken as 3,000,000 lb. per sq. in.

P	x	Px
27.2^k	4.5'	$122^{k'}$
27.6	13.5	373
28.1	22.5	632
29.2	31.5	920
33.2	40.5	1344
145.3		3391
145.3	45	6540
		$3149^{k'}$

$H = \frac{3149}{16} = 197^k$ crown thrust

$T = \sqrt{197^2 + 145^2} = 245^k$ at the springing.

Allowing 350 #/□" as D.L.

At the Crown $d_c = \frac{197{,}000}{24 \times 350} = 24''$

At the springing $d = \frac{245{,}000}{24 \times 350} = 30''$

For a liveload of 116 × 10 = 1160 # per lineal foot, –

Crown	Springing
$M^k = \frac{1160 \times 90^2 \times 12}{225} = 502{,}000''\#$	$\frac{1160 \times 90^2 \times 12}{45} = 2{,}510{,}000''\#$

The approximate stresses in the sections as assumed will then be, –

350 #/□" D.L.			(× 30/48 =) 220 #/□" D.L.		
$\frac{6 \times 502{,}000}{24 \times 24 \times 24}$	= 220	L.L.	$\frac{6 \times 2{,}510{,}000}{24 \times 48 \times 48}$	= 270	L.L.
$2000 \times \frac{2}{16}$	= 250	T+RS		250	T+RS
	820 #/□"			740 #/□"	

These indicate a slight overstress. Assume:
Crown Depth 26" Springing Depth 52"

(7) THE ARCH AXIS.

Thrust due to L.L. of half intensity $H = \frac{1}{8} \frac{580 \times 90^2}{16} = 37^k$ L.L.
197 D.L.
$H = 234^k$

Panel L.L. of half intensity $9 \times 580 = 5.2^k$. Adding to the previous D.L. values gives the totals indicated below, from which the shape of the axis follows as tabulated.

FIG. 24. Arch Design — Figs. 23 to 28.

Illustrative Problem. Design of a Symmetrical Reinforced Concrete Arch. Figs. 23–28 show design calculations for a small highway arch.

Calculations for the floor and spandrels are not shown. The data from this part of the investigation as affecting the design of the rib are indicated in (4) and the calculated dead load panel concentrations in (6).

The final design is that of the arch previously shown in Figs. 11 and 12. The preliminary results are seen to be satisfactory.

For influence lines for this arch see Fig. 7.

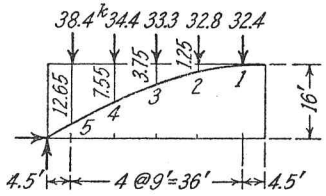

Point	p	Σp To Right	$\sum\Sigma p$ To Right	$Y=\sum\Sigma p \times \frac{9}{234}$
1	32.4	0	0	0
2	32.8	32.4	32.4	1.25
3	33.3	65.2	97.6	3.75
4	34.4	98.5	196.1	7.55
5	38.4	132.9	329.0	12.65

Locating these points to scale as establishing the approximate arch axis, the trial curves of the intrados and extrados may be sketched in and the radii determined. The thickness at the crown was taken as 2.17 ft., the quarter point as about 2.5 ft. and the springing as 4.4 ft. These proportions are shown to scale in Fig. 26 which represents the trial arch.

(8) PRELIMINARY CHECK

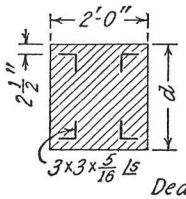

	d	A_c	$14A_s$	A	I_c	I_s	I
Crown	2.17	4.34	.69	5.03	1.70	.44	2.14
Springing	4.44	8.80	.69	9.49	14.20	2.55	16.75

Dead Load $\quad H=\frac{3149}{16.08}=196^k$ (Assuming $M=0$)

$$f_{crown}=\frac{196{,}000}{5.03\times144}=270\,\#/\square''$$

$$f_{springing}=\frac{196{,}000\times1.21}{9.49\times144}=173\,\#/\square''$$

FIG. 25. Arch Design — Figs. 23 to 28.

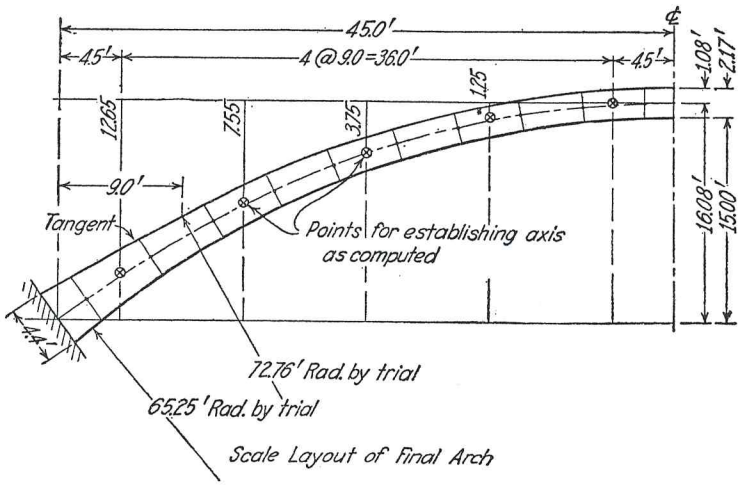

FIG. 26. Arch Design — Figs. 23 to 28.

Live Load $\quad m=\dfrac{\frac{\Delta s}{I}\text{ at springing}}{\frac{\Delta s}{I}\text{ at crown}}=\dfrac{5.65}{11.36}\cdot\dfrac{2.19}{4.51}=0.24$

$$N=\frac{\text{Drop at Quarter Point}}{h}=\frac{3.80}{16.08}=0.24$$

Following the curves of Fig. 16:

At the Crown

$$M=\pm.0045\times1.16\times90^2=\pm41.8^{k'}$$

$$H=.06\times1.16\times\frac{90^2}{16.08}=35.1^k$$

$$f=\frac{35100}{5.03\times144}+\frac{41800\times1.08}{2.14\times144}=47+148=195\,\#/\square''$$

At the Springing

$$M=\pm.0225\times1.16\times90^2=\pm209^{k'}$$

$$H=.09\times1.16\times\frac{90^2}{16.08}=52.6^k$$

$$f=\frac{52600\times1.21}{9.49\times144}+\frac{209000\times2.20}{16.75\times144}=47+191=238\,\#/\square''$$

Temperature

For 40° change $f=1350\,\frac{2.17}{16.08}\,2\,\frac{1.24}{1.72}=260\,\#/\square''$ (Fig. 17)

Rib-Shortening

Assume $37\frac{1}{2}\%$ of temperature change $=100\,\#/\square''$

Total Maximum

Crown		Springing
270	DL	173
195	LL	238
260	T	260
100	RS	100
825 #/□"	Total	770 #/□"

Using these values of m and N, it is interesting to note that the following properties of the elastic section may be found, following the curves of Fig. 16 and the approximate formulas of Fig. 17

	Total Elastic Area A	Distance to Centroid y_c	Moment of Inertia of Elastic Section I_x	I_y
Exact By Fig. 11 for Comparison	28.12	3.65	13150	440.2
By Curves Fig. 16	———	$.227\times16.08=$ 3.65	———	$.0405\,\frac{90}{2.14}\times\overline{16.08}^2=$ 440
By Approx. Form. Fig. 17	$\frac{90}{2.14}\times\frac{1.24}{2}=$ 26.1	$\frac{16.08}{3}\times\frac{1.24}{2}=$ 3.32	$\frac{26}{12}\times\overline{90}^2\times\frac{1.72}{2.48}=$ 12200	$\frac{4}{45}\times26\times\overline{16.08}^2\times\frac{1.72}{2.48}=$ 415

C. Continuous Arches on Elastic Piers

Analysis of Continuous Arches. Arches may occur in frames in which they are continuous with their piers or columns and also with girders or with other arches. The subject of bridge arch series on slender piers has occupied an increasingly important position in American literature in recent years. Combinations with girders offer interesting possibilities in bridge construction as well as in buildings.

Several methods are available for the analysis of such cases.* Of these the method described below is recommended for simplicity. Essentially, it is merely a modification of the method of distributing fixed-end moments and thrusts.

Consider the series of two arches and a pier shown in Fig. 29. Suppose that some condition of loading produces thrust lines as shown when the top of the pier is restrained against movement.

We may now distribute the unbalanced horizontal thrust on the pier to the three members (two arches and pier) in proportion to their "thrust stiffness." This thrust stiffness may be defined as the horizontal thrust needed to produce unit horizontal displacement without rotation when the other end of member is restrained. This will set up unbalanced moments at the pier top which are to be combined with the original unbalanced moment.

The total unbalanced moment may now be distributed among the three members in proportion to their "moment stiffness." This term may be defined as the moment necessary to produce unit rotation without displacement when the opposite end of the member is restrained.

This latter distribution will now produce unbalanced thrusts at the pier top and the procedure must be repeated until the joint is accurately balanced for both horizontal forces and for moments.

The procedure just indicated is easy to follow because it uses the methods of moment distribution with which the reader is already familiar. However, it has the disadvantage that the unbalanced thrusts due to rotation and the unbalanced moments due to displacement are usually quite large. As a consequence the series of values converges slowly.

Recommended Procedure. The rotation of the joint may be produced about any point instead of being produced about the more obvious pier top. This point may be so chosen that the thrusts produced by displacement of the pier top (without rotation) produce no total unbalanced moment about this point. If the point is so chosen, it will

* For a general discussion of methods, see "The Column Analogy," Bul. 215, Eng. Exp. Sta., Univ. Ill., pages 71 *et seq.*

also be true that the thrusts produced by rotation of the joint about this point will produce no total unbalanced thrust.

To simplify the final data, it is also convenient to show the results of balancing the joint by the resulting changes in thrusts in each member, both the magnitude and position of the changes in thrust being shown. From these data all other values may be computed by statics.

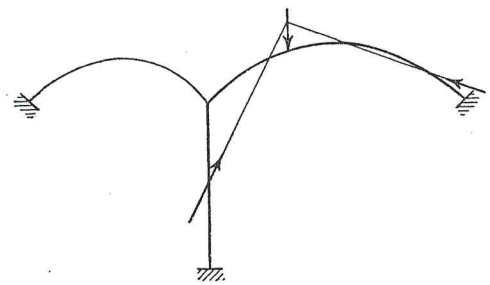

Fig. 29. Continuous Arches.

Thrusts in the arches are taken as positive and pulls as negative.* The pier thrusts may be got by subtraction. Moments in the arches follow the convention of signs customary for such moments (positive moment produces tension on the intrados of the arch). Positive thrust acting above any point (with positive lever arm), then, produces positive moment.

Five sets of values depending on the physical properties of the members are now needed for the solution of this problem:

(*a*) The location of the point about which the pier top is to be rotated if the resulting thrusts are to be balanced or about which the moments are balanced if the pier top is displaced without rotation. For convenience of identification, this point is called hereafter the "neutral point" of the joint.

(*b*) Values of "thrust stiffness" for each of the three members. These are the thrusts needed to produce unit displacement of the ends of the members without rotation.

(*c*) Values of "moment stiffness" for each of the three members. These are the moments needed to produce unit rotation of the ends of the members about the neutral point of the joint without displacement of the neutral point.

* It would have been more consistent with the footnote of page 56, Chapter III, if tension in the arch instead of thrust had been taken as positive. It evidently makes no difference here in the solution. Using positive values for thrust has the justification that thrust is the normal condition in an arch.

(*d*) Location in each member of the line of thrust for displacement of the joint without rotation.

(*e*) Location in each member of the line of thrust for rotation of the joint about the neutral point without displacement of the neutral point.

As will now be shown, these values are readily deduced by the column analogy from data necessarily found for analysis of the members when treated as fixed-ended. For symmetrical arches we may deduce readily a series of convenient formulas for these quantities.

The method indicated is applicable for any combination of loading or distortion. It is recommended for complete study of an arch series that unit thrusts and unit moments be distributed at each neutral point separately. The procedure is expedited if unit thrusts and moments are first distributed at a joint near the center of the structure. For subsequent distributions at joints on either side, this joint may be held rigid and the resulting thrusts and moments then distributed by use of the factors already found. Thus successively the distribution of thrusts or moments is more rapid as we consider joints further removed from the center of the structure. See pages 104–5 for application of this procedure to continuous frames.

Where this procedure is applied to a series containing more than two arches it is necessary to distribute not only the original unbalanced fixed-end thrusts and moments but also those coming to the joints from other joints. It has been found convenient to write only the values carried over during the process of distribution. Since the moments distributed and those carried over may be expressed as thrusts acting along the line of thrust for such distribution, the final result is obtained in terms of the changes in thrust.

In computing the effect of rib-shortening, of shrinkage or change of temperature, or of movements of the foundations, it will be found convenient to assume first that all movement takes place in the arches, the piers being without distortion, and then to compute, by the column analogy, the terminal forces (moments and thrusts) needed to restore continuity at the pier tops just as if the arches were isolated spans. The unbalanced forces thus computed are then to be distributed as is done below for unbalanced forces due to loads.

Thus horizontal movements (change of span which would be produced by shrinkage, change of temperature, or rib-shortening in the arches, or by horizontal movements of piers without rotation) are to be treated in the column analogy as M_y values for the arches involved; vertical movements (change of level of springings due to shrinkage, change of temperature, or rib-shortening in the piers, or to settlement of piers without rotation) are M_x values on the analogous columns corresponding

to the arches; rotations of the bases of piers are to be taken as loads on the analogous columns for the adjoining arches. Studies of the effect of rotations of the foundations of high piers will be found especially illuminating as indicating the importance, discussed below, of giving careful attention to balancing thrusts from dead load and from change of temperature.

The constants for symmetrical arches in Figs. 30 and 31, and for unsymmetrical arches in Fig. 37 may be used conveniently in determining the forces just discussed.

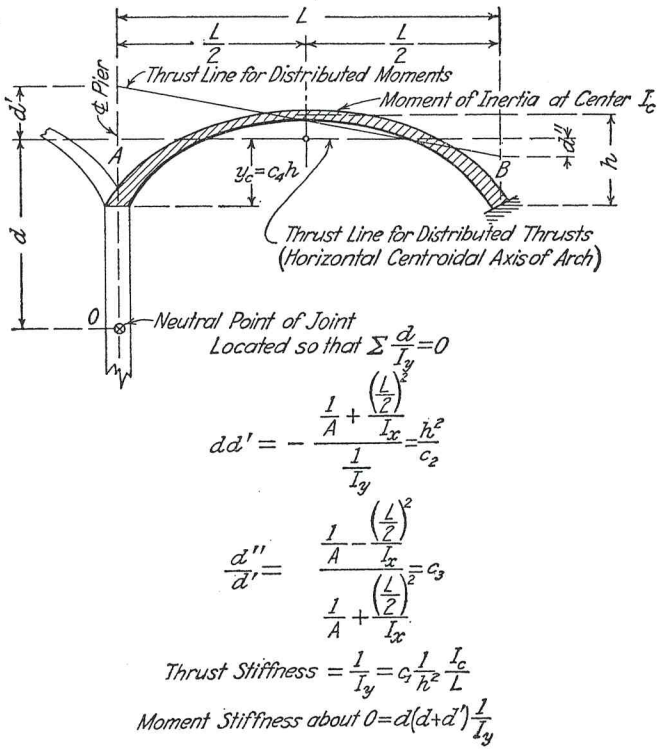

FIG. 30. Continuous Arches — Thrust Lines in Symmetrical Arch.

Distribution Constants. These quantities for symmetrical arches are shown in Fig. 30. Four constants, designated c_1, c_2, c_3 and c_4, are deduced from the physical properties of the arches. The values needed are given in Fig. 31 for arches analyzed by Charles S. Whitney.*

The constants may be deduced from the column analogy. Horizontal displacement of the end of the arch without rotation corresponds

* "Design of Symmetrical Concrete Arches," Trans. Am. Soc. C. E., Vol. 88, page 931, 1925.

to flexure of the analogous column section about a horizontal axis. The thrust line (neutral axis) is the horizontal centroidal axis of the analogous column section. The thrust for unit displacement is the stress on the analogous column section at unit vertical distance from the neutral axis. Therefore

$$\text{Thrust stiffness} = \frac{1 \times 1}{I_y} = \frac{1}{I_y}$$

CONSTANTS FOR SYMMETRICAL CONCRETE ARCHES – WHITNEY

Properties of the Analogous Column in Terms of $K = \frac{I_c}{L}$ *(See Fig. 30).*

$$\frac{1}{I_y} = \frac{c_1}{h^2}K \qquad y_c = c_4 h \qquad c_2 = \frac{c_1}{c_6 + c_5} \qquad c_3 = \frac{c_6 - c_5}{c_6 + c_5}$$

(See also Fig. 16.)

	$m = .20$		$m = .30$		$m = .40$		$m = .50$	
$c_5 \rightarrow$	$\frac{I}{A} = 1.67$		$\frac{I}{A} = 1.54$		$\frac{I}{A} = 1.43$		$\frac{I}{A} = 1.33$	
$c_6 \rightarrow$	$\frac{x^2}{I_x} = 7.50$		$\frac{x^2}{I_x} = 6.32$		$\frac{x^2}{I_x} = 5.45$		$\frac{x^2}{I_x} = 4.80$	
N	c_1	c_4	c_1	c_4	c_1	c_4	c_1	c_4
.15	36.10	.8388	28.90	.8201	24.33	.8040	21.19	.7901
.16	34.97	.8325	28.09	.8135	23.70	.7971	20.66	.7830
.17	33.90	.8262	27.32	.8069	23.15	.7903	20.16	.7760
.18	32.79	.8201	26.60	.8004	22.57	.7836	19.72	.7691
.19	31.85	.8139	25.91	.7940	21.98	.7770	19.27	.7622
.20	30.96	.8078	25.25	.7876	21.46	.7704	18.87	.7554
.21	30.12	.8017	24.57	.7813	21.05	.7638	18.48	.7487
.22	29.24	.7957	23.98	.7750	20.58	.7573	18.08	.7420
.23	28.41	.7897	23.36	.7688	20.08	.7509	17.67	.7353
.24	27.70	.7837	22.88	.7626	19.65	.7444	17.33	.7287
.25	27.03	.7778	22.32	.7564	19.23	.7381	17.01	.7222

$$\frac{dd'}{h^2} = \frac{c_6 + c_5}{c_1} \qquad \frac{d''}{d'} = \frac{c_6 - c_5}{c_6 + c_5}$$

FIG. 31. Arch Constants (after Whitney) for Use in Analysis of Continuous Arches.

Unit rotation about the neutral point of the joint corresponds to unit load at this point on the analogous column section. The resulting thrust acts along the neutral axis of the analogous column section for this load, and the thrust equals the fiber stress for this load on the column section at unit vertical distance from the neutral axis. The neutral axis may be conveniently located from two points at which the fiber stress is zero. Hence (see Fig. 30):

$$\frac{1}{A} + \frac{\frac{L}{2}}{I_x}\frac{L}{2} + \frac{d}{I_y}d' = 0$$

and

$$\frac{1}{A} - \frac{\frac{L}{2}}{I_x}\frac{L}{2} + \frac{d}{I_y}d'' = 0$$

Hence

$$dd' = -\frac{\frac{1}{A} + \frac{\left(\frac{L}{2}\right)^2}{I_x}}{\frac{1}{I_y}}$$

and

$$\frac{d''}{d'} = \frac{\frac{1}{A} - \frac{\left(\frac{L}{2}\right)^2}{I_x}}{\frac{1}{A} + \frac{\left(\frac{L}{2}\right)^2}{I_x}}$$

The moment about the neutral point produced by unit rotation about the neutral point is the fiber stress at this point for unit load there on the analogous column section. Hence

$$\text{Moment stiffness} = \frac{1}{A} + \frac{\frac{L}{2}}{I_x}\frac{L}{2} + \frac{d}{I_y}d$$

$$= \left[\frac{\frac{1}{A} + \frac{\left(\frac{L}{2}\right)^2}{I_x}}{\frac{1}{I_y}} + d^2\right]\frac{1}{I_y} = (dd' + d^2)\frac{1}{I_y} = d(d + d')\frac{1}{I_y}$$

The horizontal thrust produced may be found by dividing the change in moment at A by the lever arm $(d + d')$, or by dividing that at B by $(d - d'')$ at B.

The constants needed for the pier are $1/I_y$ for determining the thrust stiffness, the location of the elastic centroid and $\frac{1/A}{1/I_y}$ for locating the thrust line for rotation and for finding from this the moment stiffness.

Illustrative Problem. The application of the method is indicated for the arch structure of four continuous spans shown in Figs. 33 and 34. The arches are all assumed to be of the same type according to Whitney's classification, $m = 0.40$, $N = 0.20$. The piers, for convenience, are

assumed to have no batter. The spans, rises and crown thicknesses of the arches and the height and width of the piers are first listed. The essential constants for arches are then found from Fig. 31. These are the preliminary data.

First compute the relative values of $1/I_y$ for all members. This value has been taken as unity for the first arch, and those for other members are found by proportion from the formulas for $1/I_y$ shown.

Let y_c be the distance from pier top to horizontal centroidal axis of an arch or pier:

Find the d values so that $\Sigma d/I_y = 0$ at each pier.

From the values of $dd' = h^2/c_2$, find values of d'.

Find $d'' = c_3 d'$ for the arches. The values of d, d' and d'' locate the thrust lines in the arches.

Find $d(d + d')1/I_y$ as a measure of the moment stiffness at each joint.

Determine for the arches distribution factors for the thrust at each pier top as $\dfrac{\frac{1}{I_y}}{\Sigma \frac{1}{I_y}}$ for each member.

The moments about the neutral point of the joint at each pier top are to be distributed in the ratio $\dfrac{d(d+d')\frac{1}{I_y}}{\Sigma\left[d(d+d')\frac{1}{I_y}\right]}$. These distributed moments in the arches are produced by thrusts acting along the thrust lines for rotation at the neutral point and produce moments about the neutral point at the other end of the arch equal to this thrust multiplied by its lever arm. The moments at any joint are, then, carried over to the other end of the arch in the ratio

$$\frac{d_a(d_a + d_a')\frac{1}{I_y}}{\Sigma\left[d_a(d_a + d_a')\frac{1}{I_y}\right]} \cdot \frac{d_b - d_a''}{d_a + d_a'}$$

where the subscript a represents values at the joint at which the distribution is being made and the subscript b represents a value at the other end of the arch. These relations are best seen in Fig. 32.

We have now determined the essential constants to be used in the distribution. These are

(*a*) The distribution factors for unbalanced thrust, or the percentages of the unbalanced thrusts to be carried over to the other end of the arches, which is the same thing.

(*b*) The percentages of the unbalanced moments about the neutral point to be carried over as moments about the neutral point at the other ends of the arches.

(*c*) The location of the thrust lines for distributed thrusts and for distributed moments.

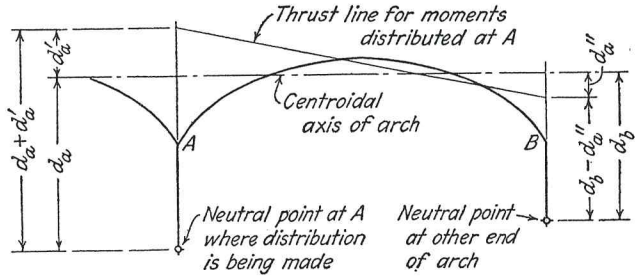

FIG. 32. Continuous Arches — Thrust Lines in Symmetrical Arch. (See Fig. 30.)

For the arches of this problem, these values are shown in Fig. 33.

In this series of arches we have analyzed for only one condition of loading, a load of 0.2^k at the center of arch BC, Fig. 34.

We first find, from the influence lines for fixed-end arches, the thrust and end moments for this condition of loading. (See influence lines, Figs. 14 and 15, pages 301 and 302.)

$$H = 0.256\frac{L}{h}P = 128.0$$

$$M = 0.054\,PL = 1080$$

These end moments are then referred to the neutral points of joints B and C, giving $M = +2860$ at B, and $M = +3310$ at C.

First distribute the unbalanced thrusts. Thus

$$128 \times 0.0111 = 1.42 \text{ from } B \text{ to } A$$
$$128 \times 0.0135 = 1.73 \text{ from } B \text{ to } C$$
$$128 \times 0.0310 = 3.98 \text{ from } C \text{ to } B$$

One more distribution has been made.

The total thrusts carried over are now converted into moments about the neutral points by multiplying by the distances from these neutral points to the thrust lines for distributed thrusts. These moments are then added to the original fixed-end moments.

Now carry over the distributed moments. Thus

$$51 \times 0.099 = 5 \text{ from } A \text{ to } B$$
$$2684 \times 0.108 = 290 \text{ from } B \text{ to } A$$
$$2684 \times 0.192 = 516 \text{ from } B \text{ to } C$$
$$3229 \times 0.221 = 713 \text{ from } C \text{ to } B$$

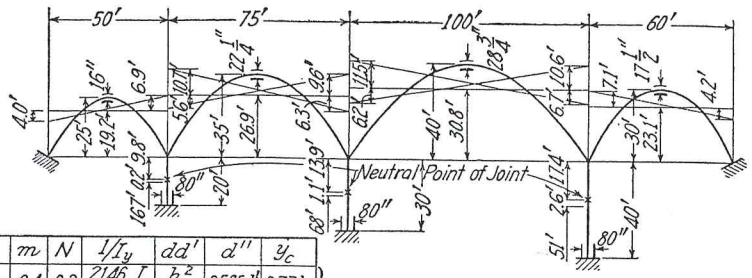

Data	m	N	$1/I_y$	dd'	d''	y_c
Arches	0.4	0.2	$\frac{21.46}{h^2}\frac{I_c}{L}$	$\frac{h^2}{3.12}$	$0.585d'$	$0.77h$
Piers	No batter		$\frac{12}{h^2}\frac{I}{h}$	$\frac{h^2}{12}$	—	$\frac{1}{2}h$

See Fig. 31

$\frac{1}{I_y} \propto \frac{t^3}{Lh^2}$	1		0.92		1.12			0.76
Relative $\frac{1}{I_y} \propto \frac{t^3}{h^2 h/L} \times \frac{12}{21.46}$		274		81			34.1	
Σ		276		83			36	
Distribution %	0.35		0.33	1.11	1.35	3.10		2.10
$\times y_c$	$\times(+19.2)$	$\times(-10.0)=$ -2740 $+19$ $+25$ -2696 $=276$ 9.8	$=\times(+26.9)=$	$\times(-15)=$ -1215 $+35$ $+25$ -1155 $=83$ 13.9	$=\times(+30.8)=$		$\times(-20.0)=$ -682 $+35$ $+18$ -629 $=36$ 17.4	$=\times(+23.1)$
d	29.0	0.2	36.7	40.8	1.1	44.7	48.2	2.6	40.5
d' $\frac{h^2}{3.12d}=$	6.9		10.7	9.6		11.5	10.6		7.1
d' $\frac{h^2}{12d}=$		167			68			51	
$d''=0.585d'=$	4.0		6.3	5.6		6.7	6.2		4.2
$d(d'+d)\frac{1}{I_y}=$	1040	9180	1600	1900	6160	2820	3180	4760	1460
Σ		11820			10880			9400	
%	8.8		13.5	17.5		26.0	33.8		15.5
$\times \frac{d_b''-d_a''}{d_a+d_a'}$	$\times\frac{25}{35.9}$		$\times\frac{34.5}{47.4}$	$\times\frac{31.1}{50.4}$		$\times\frac{41.5}{56.2}$	$\times\frac{38.5}{58.8}$		$\times\frac{36.3}{47.6}$
	6.1		9.9	10.8		19.2	22.1		11.8

FIG. 33. Continuous Arch Series — Constants for Analysis. (See Distribution in Fig. 34.)

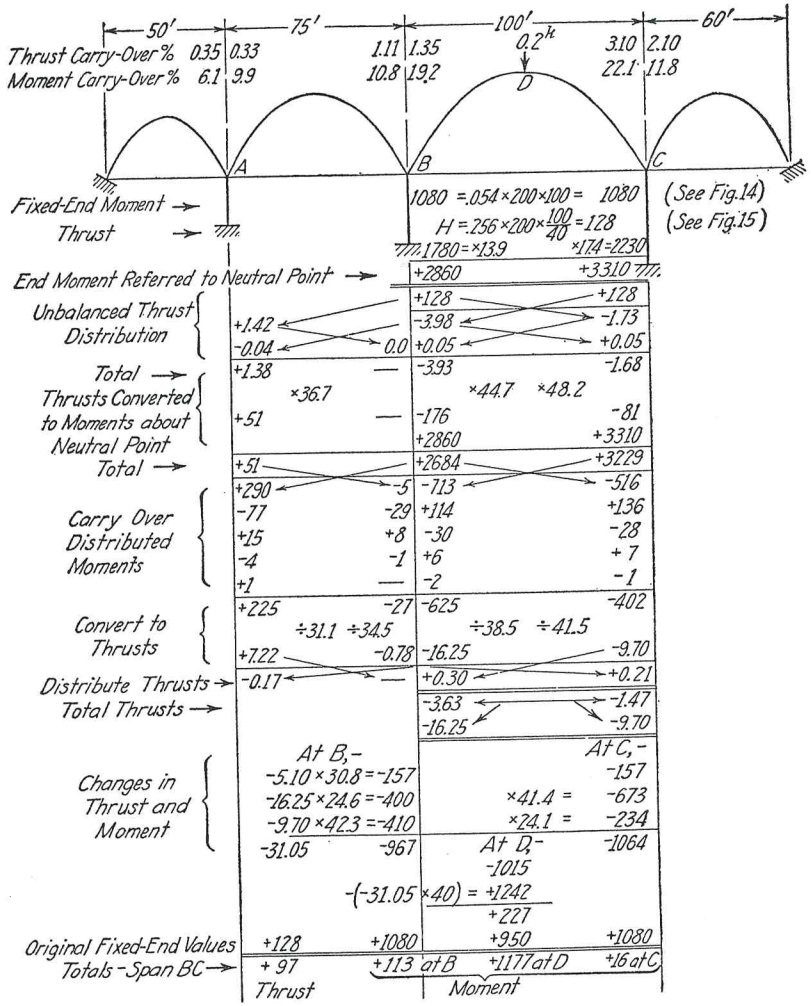

FIG. 34. Continuous Arch Series — Distribution of Thrusts. (For Constants Used, See Fig. 33.)

The process is then repeated as usual in moment distribution. Three distributions have been made.

The total moments carried over are now divided by the distances from the thrust lines to the neutral points at the ends to which the moment is carried to give the thrusts.

These thrusts are then distributed as were the original unbalanced thrusts, though in this case it is scarcely worth doing.

Now find the total thrust carried over by distributing thrusts ($-3.63 - 1.47 = -5.10$), the total carried over from B to C (-9.70) and the total carried over from C to B (-16.25).

The remaining problem of finding the resulting changes of moment at crown and at the two springings is one of statics. Each change of thrust is multiplied by its lever arm about the springings and the totals determined. The change in moment at the crown is found as the average of the changes at springings less the change in thrust times the rise.

A simpler example is shown in Fig. 35. The distribution factors are assumed to be as given. Note that the end arches do not appear in the distributions.*

Influence Lines for Moments. The influence lines for moment due to vertical loads on an arch fixed at ends may be drawn by producing about the axis of the section relative rotation of the two sides of the section to be studied. Vertical displacements of load points divided by the rotation will then be influence ordinates for the moment to be studied.†

If the arch is one of a series the forces producing the rotation will produce also rotation and displacement of the ends of the arch (pier tops), and these movements will produce further vertical displacements. The influence line, then, for loads in the span may be considered to be made up of three parts (see Fig. 23, page 269):

(*a*) The influence ordinates for the arch fixed at ends.

(*b*) Changes in influence ordinates produced by spread of the ends of the span due to the forces generating the influence line.

(*c*) Changes in influence ordinates produced similarly by rotations of the pier tops.

Studies of a large range of cases have shown that the third factor is relatively unimportant. The shape of the curve showing the changes

* This problem is taken from "Analysis of Continuous Frames by Distributing Fixed-End Moments," Proc. Am. Soc. C. E., May, 1932. The entire paper and discussion from May, 1930, to May, 1932, is published in Vol. 96 of the Trans. Am. Soc. C. E., 1932.

† See discussion of Müller-Breslau's Principle, pages 79 and 247.

due to the second factor have the same shape as the influence line for crown thrust for the fixed-end condition, and the error is not very

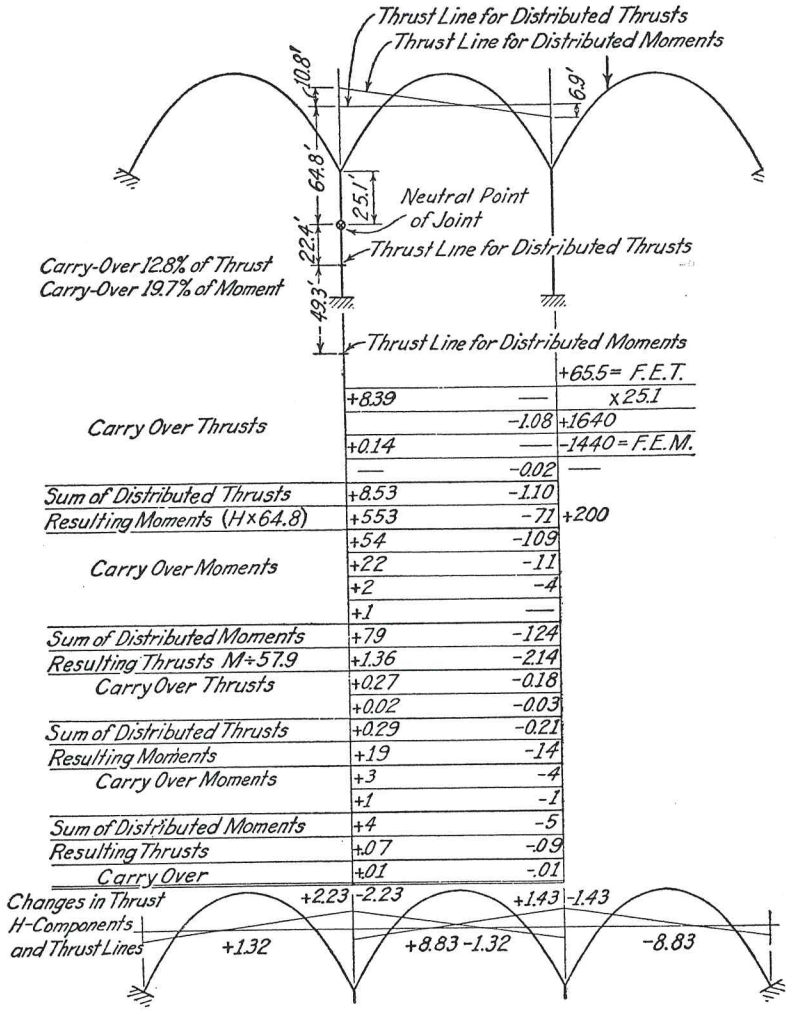

FIG. 35. Symmetrical Continuous Arch Series — Distribution of Thrusts.

great if it is assumed that the whole change (*b* and *c* combined) follows the same variation.

It is possible then to construct rapidly influence lines which are quite close approximations by computing moments for a load at the crown of

each arch of the series successively. These give one ordinate in each span on each of the influence lines for the continuous series. By drawing the influence lines for the fixed-end condition and adding lines having ordinates proportional to those for crown thrust and with a value at the center to give the computed total influence ordinate, approximations very helpful for preliminary work and usually sufficiently accurate for final design are obtained.

In Fig. 36, influence lines are plotted for crown moment at D and for springing moment at B in span BC of Fig. 34 for loads in span BC only.

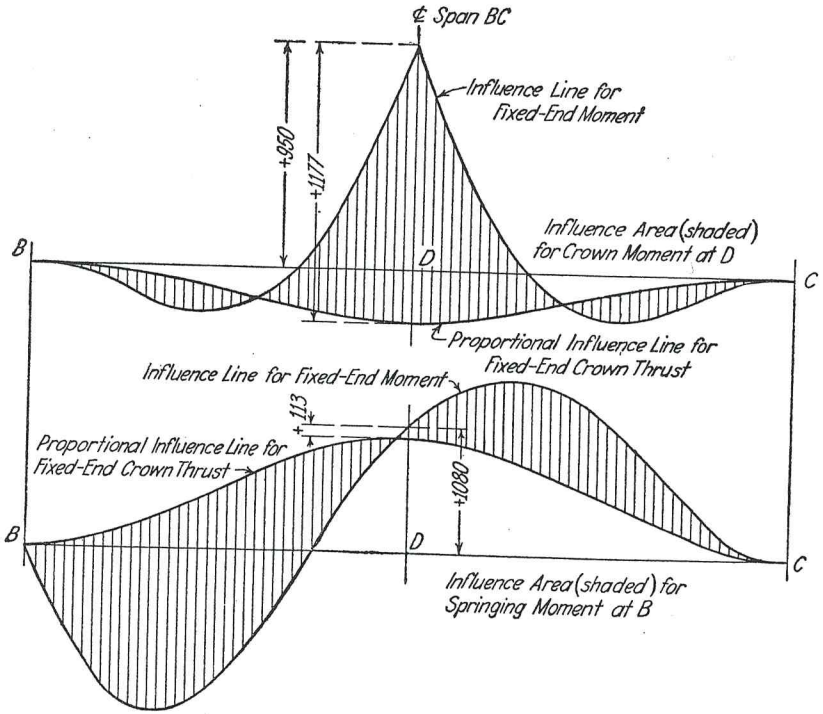

FIG. 36. Approximate Influence Lines for Moments at Crown and at Springing — Span BC of Series Shown in Figs. 33–34.

See also discussion of influence lines for continuous arches in Chapter VIII.

The influence lines may, of course, be filled in with greater accuracy by placing loads at other points on the spans. How much detail is desired must be determined by each designer for his own case, but the studies need not be very laborious.

Balancing Thrusts and Moments in Continuous Arch Series. It is evident that foundation distortions may produce serious stresses in arches resting on high piers. Since such distortions are most likely to be produced by loads of long duration, as well as because of the importance of dead load and temperature change in the analysis, it is desirable that the fixed-end moments, and even more important that the fixed-end thrusts, be balanced at each pier top for dead load and for change of temperature.

If the arch axis follows the string polygon for dead load, there will be no moment at the springing from dead load. The thrust

$$H_D \propto L \frac{L}{h}$$

for the same load intensity on all arches. The load per foot, due chiefly to the deck, is approximately the same in all spans. For balanced thrusts, then, we should have

$$h \propto L^2$$

This is often difficult to get, since, if the span varies, either the level of the roadway must be varied or the springing levels of the spans must be different. This often results in considerable assymmetry in the arches.

For arches of constant width and of given proportions — that is, for the same values of N and m as given by Whitney — we have for thrust and moment at springing due to change of temperature

$$H_T \propto \frac{d^3}{h^2}$$

$$M_T \propto \frac{d^3}{h}$$

But if, as is more important, we have balanced the dead load

$$h \propto L^2$$

Hence

$$H_T \propto \frac{d^3}{L^4}$$

$$M_T \propto \frac{d^3}{L^2}$$

To balance the thrusts, then, we should have $d^3 \propto L^4$, and even then the temperature moments will be slightly unbalanced.

Unsymmetrical Arches in Continuous Series. The formulas above for the properties of the arch are slightly modified where the arch is unsymmetrical. The thrust line for displacements is no longer hori-

zontal. All ordinates, however, are conveniently measured from this thrust line. (See Fig. 37.) This thrust line is inclined to the horizontal axis at an angle $\tan^{-1} I_{xy}/I_x$. The thrust line for rotation about O is located with reference to the thrust line for displacements by the values d' and d'' of the intercepts.

These relations may be deduced from the column analogy. Evidently they represent the general case, of which the symmetrical arch is

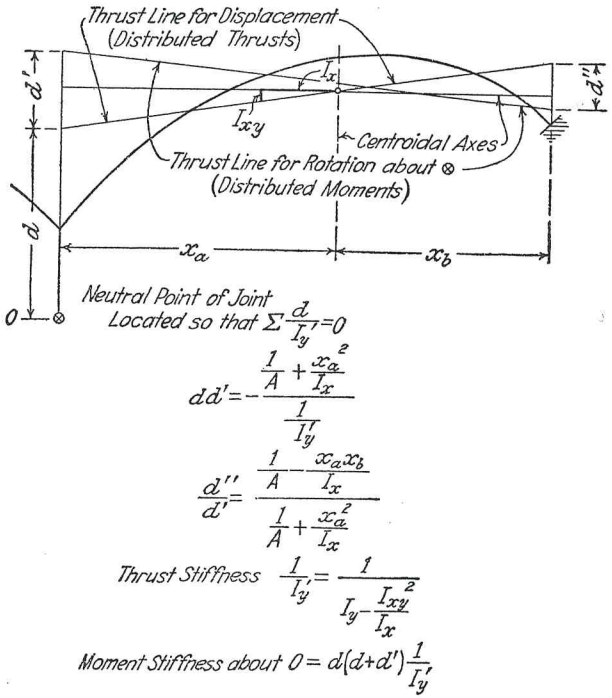

FIG. 37. Continuous Arches — Thrust Lines in Unsymmetrical Arch.

special. The neutral point of a joint is to be so located that $\Sigma(d/I_y') = 0$, where, if the arches are symmetrical, $I_y' = I_y$.

D. Effect of Superstructure

Where, as is usually the case in a spandrel-braced arch, the deck merges with the arch rib near the crown, or where the columns near the crown are very short, the usual method of analysis in which the arch rib is treated as an independent structure is inadequate. The rib and superstructure really act together, the resulting structure being

very much stiffened near the crown. The long flexible columns near the springing have less effect.

This action affects the forces produced by live load and temperature change, and it affects materially the resistance of sections near the crown of the arch. It also sets up stresses, which apparently may be quite high, in the short posts near the crown.

Effect of Superstructure on Design. The exact analysis of the entire structure presents an interesting problem in mechanics. But the interest of designers is not in the problem in mechanics but in developing a safe, consistent and economical structure. No great economy is to be expected from trying to design the structure to act as a whole. The moments due to live load are very much decreased, it is true; but those due to dead load are scarcely affected, and those due to change of temperature are not decreased and may even be increased. Assume that in a given arch rib 60 in. wide and 30 in. deep designed by the usual method we have

Unit stress due to weight of rib	=	100	lb. per sq. in.
" " " deck	=	400	" "
" " " live load	=	300	" "
" " " temperature	=	200	" "
		1,000	lb. per sq. in.

Assume now that the computed moment due to live load is decreased 50% if the structure is analyzed as a whole and that the section is to be decreased to maintain the same unit stresses. As the rib depth is decreased

Unit stress due to weight of rib is unchanged.
" " " deck varies as $1/d$.
" " " live load varies approximately as $1/d^2$.
" " " temperature varies approximately as d.

Try depth = 25 in.

Rib	=	100	lb. per sq. in.
Deck $400 \times \frac{30}{25}$	=	480	" "
Live Load $\frac{1}{2}\left(\frac{30}{25}\right)^2 \times 300$	=	220	" "
Temperature $200 \times \frac{25}{30}$	=	170	" "
		970	lb. per sq. in.

Or we may get the same total unit stress by changing the width to 51 in. and leaving the depth unchanged. In one case we save 17% and in the other 15% of the quantities in the rib. But only about one-third of the cost of the rib varies with the quantities, and the cost of the

rib is only about one-third of the total cost. We have, then, saved less than (1/9) 16% = 2% of the total cost of the structure.

But if we hold the same sections for the columns, we have lowered the factor of safety of the structure. We are now depending upon the strength of these columns not only to carry their own load but also to assist the main arch rib.

Evidently the above computation is based on assumed values which permit of wide variation, but they give some scale on the relative importance of the elements involved. As the span becomes greater, the proportion of the total cost represented by the rib becomes larger, but the effect on the large rib of the small spandrel columns becomes smaller and for very long spans is entirely negligible.

The general conclusion indicated is that it is inadvisable to depend on the superstructure to assist the arch rib. We are dealing here with secondary stresses in the superstructure, objectionable and largely unavoidable, but not to be depended on to do the work of the main structure. As usual, the design involves sound judgment as well as stress analysis; and judgment is more important.

It may be thought that the interaction of rib and superstructure may induce excessive stresses in the columns. Analyses seem to indicate high flexural stresses in the short columns near the crown. But the authors have not been able to find any evidence that these stresses have done any damage in existing arches.

Effect of Expansion Joints in the Deck. Some engineers try to avoid these secondary stresses by placing joints in the floor. Some have stated that the omission of such joints results in excessive cracking of the floor, though it is not clear why this should be the case.

Some appear to have thought of such joints as similar in action to expansion joints in a viaduct, others as a means of making rib and superstructure act independently. A little consideration will show that the first viewpoint is incorrect. Consider the arch shown in Fig. 38. If the structure were on rollers at the ends, there would be no stress due to expansion. Now push back the abutments. The bottoms of the columns now move toward the center, and the tops tend to tip out from the center. It will be found that the tops have moved out, except near the ends of the span, and that most of the deck, which would be in compression in a viaduct, is in tension in the arch. Thus the effect of expansion is different in nature in the arch owing to the tipping of the posts, and is also opposite in sense.

Some idea of the action of the deck may be had by estimating the increased resistance of the portion of the arch near the crown. The position of the axis and the I value at the saddle may be computed;

beyond the saddle the problem is more complicated, but a guess as to the position of the equivalent axis and the equivalent I value (relative rotation per unit of length for unit moment) may be made (see Fig. 38).

From studies of the distortion of the composite structure it appears that expansion joints are ineffective in separating the action of rib and deck. There is a considerable body of evidence to show that they are really not needed except at the end of the span. There are objections to their use on the grounds that joints are usually points of disintegra-

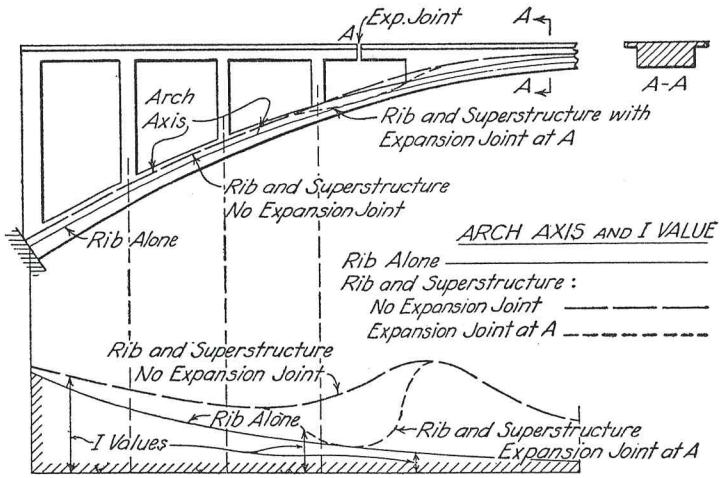

FIG. 38. Effect of Superstructure of Arches.

tion due to weathering, as may be observed in almost any concrete structure, that they produce a slightly objectionable discontinuity in the roadway, and that they produce local movements in the handrail or parapet, which may and often do result in unsightly spalling. That the prevailing tendency of practice is against the use of expansion joints except at the ends of the span is shown by the following survey made by Mr. E. K. Timby, and published in Engineering News-Record, March 17, 1932:

TABLE I

EXPANSION JOINTS IN EXISTING BRIDGES

Span, Ft.	Type		Location of Expansion Joints						Sub-Total	Total
	Spandrel Columns	Transverse Spandrel Walls	Piers Only	Piers and $\frac{1}{3}$ Points	Piers and $\frac{1}{4}$ Points	Piers and $\frac{1}{5}$ Points	Every 30 Ft.	Every Spandrel Connect.		
0–100	X	.....	24	23	.....	.....	5	15	67	84
	.....	X	8	.....	.....	.....	.....	9	17	
101–150	X	.....	23	18	7	5	6	4	63	73
	.....	X	2	8	.....	.....	.....	.....	10	
151–200	X	.....	13	4	2	2	1	6	28	28
	.....	X	.....	.....	.....	.....	.....	.....	.....	
201–310	X	.....	.....	.....	.....	1	1	6	8	9
	.....	X	1	.....	.....	.....	.....	.....	1	
Sub-Total	X	.....	60	45	9	8	13	31	166	194
	.....	X	11	8	.....	.....	.....	9	28	
Total	.....	.....	71	53	9	8	13	40	194	.....

TABLE II

PRESENT PRACTICE IN USE OF EXPANSION JOINTS

Number of States	Location of Expansion Joints						No General Practice
	Piers Only	Piers and $\frac{1}{3}$ Points	Piers and $\frac{1}{4}$ Points	Piers and $\frac{1}{5}$ Points	Every 30 Ft.	Every Spandrel Connect.	
9	85	.....	.....	.....	.....	.....	.....
8	.....	35	.....	.....	.....	.....	.....
1	.....	.....	2	.....	.....	.....	.....
0	.....	.....	.....	0	.....	.....	.....
5	.....	.....	.....	.....	27	.....	.....
6	.....	.....	.....	.....	.....	41	.....
7	.....	.....	.....	.....	.....	.....	4

These tables summarize the replies of 36 state highway departments to a questionnaire. Mr. Timby draws the following conclusions from his studies:

"1. Forty-three per cent of the bridges built have a span of less than 100 ft.

"2. Thirty-eight per cent have a span between 100 and 150 ft.

"3. Eighty-six per cent are of the spandrel-column type, and fourteen per cent are of the transverse spandrel-wall type.

"4. Thirty-seven per cent have expansion joints at the piers only.

"5. Twenty-seven per cent have expansion joints at piers and at the one-third points.

"6. Twenty-one per cent allow for expansion at every spandrel connection.

"7. Nine states (25 per cent of the replies), representing 44 per cent of the structures built, now prefer expansion joints at the piers only.

"8. Eight states (22 per cent of the replies), representing 18 per cent of the structures built, now prefer expansion joints at piers and at the one-third points.

"9. Five states (14 per cent of the replies), representing 14 per cent of the structures built, now prefer expansion joints every 30 ft.

"10. Six states (17 per cent of the replies), representing 21 per cent of the structures built, now prefer expansion motion at every spandrel connection.

"11. Seven states (19 per cent of the replies), representing 2 per cent of the structures built, have no general practice.

"12. States representing 44 per cent of the structures built now prefer expansion joints at the piers only, whereas only 37 per cent of the structures built were constructed in this manner. This indicates a swing in favor of expansion joints at piers only.

"13. States representing 18 per cent of the structures built now prefer expansion joints at piers and at the one-third points, whereas 27 per cent of the structures built were constructed in this manner. This again indicates a preference for fewer expansion joints.

"14. States representing 21 per cent of the structures built prefer expansion joints at every spandrel connection, and 21 per cent of the structures built were constructed in this manner."

E. Combinations of Girders and Arches

All sorts of combinations of girders and arches are possible. Such combinations have been frequently used in bridge construction abroad. In special buildings they are often a desirable solution and would prob-

ably be more used if their analysis were clearly understood. This field is too broad for complete development here, but a few suggestions of the possibilities are indicated. The most important question here, as elsewhere, is just what analyses are worth while, what loadings and moments control design. What is wanted, of course, is not an academic listing of all possible stresses, but a determination of the controlling sections.

Illustrative Problems — Suggested Studies. The illustrations of Figs. 39–42 are merely suggestive.

Fig. 39

Rotation at the ends of the arch may occur, but displacement is prevented, except for the negligible compression in girders and columns. Moments may then be distributed at once about A and B. The thrust lines for rotations about these points should be found and the change of horizontal thrust determined by dividing by the lever arm.

(1) Determine fixed-end moments in arch at A and B.
(2) Distribute these moments.
(3) Find the resulting thrust lines and changes of thrust in the arch.

Fig. 40

In this case the tied arches usually cannot be treated as absolutely rigid. We must use moment distribution in distributing shears.

(1) Add a false strut DH as shown in (*b*).

Determine fixed-end moments at A, at B, at C, at D, at F and at G.

Distribute these and determine from statics the false forces P' and P''.

$P' = W_3 \pm$ (shear in columns DF and HG).

$P'' = W_2 \pm W_1 \pm$ (shear in columns DF and HG)
$\pm$ (shears at bases of lower columns).

(2) Determine two sets of shears and corresponding moments for forces corresponding to forces P' and P'', and by simultaneous equations find moments produced by P' and P''. Find the stress in the strut.

(3) Remove the false strut, neutralizing it by opposite forces as shown in (*c*).

Distribute these forces among the columns on the assumption that they are fixed-ended. Distribute these fixed-end moments and determine what forces the distributed moments actually represent. Find the true moments.

(4) Add all moments as determined in (1), (2) and (3).

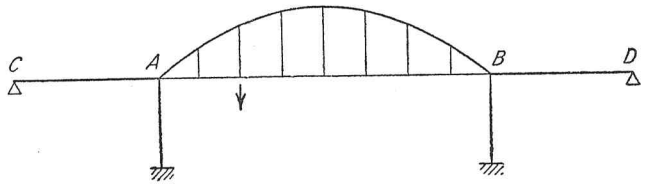

Fig. 39. Continuous Arch Frame.

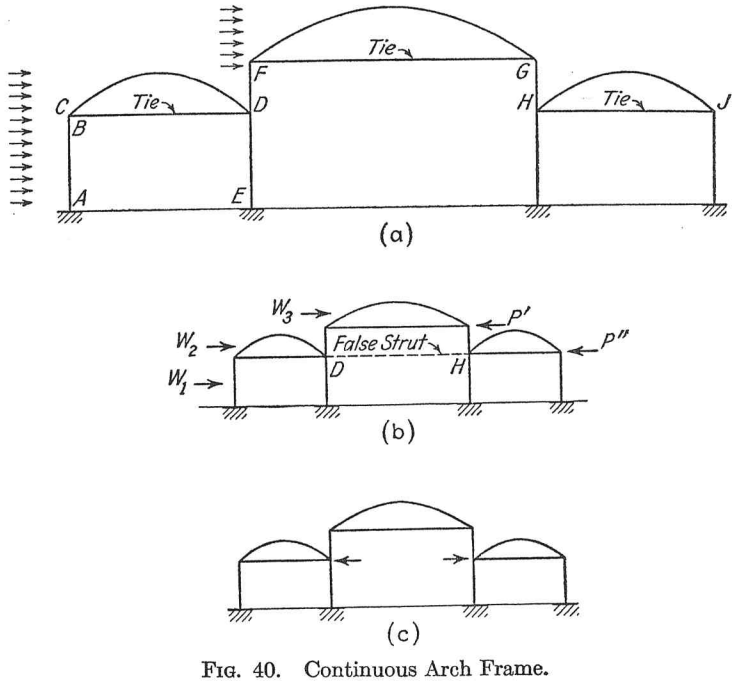

Fig. 40. Continuous Arch Frame.

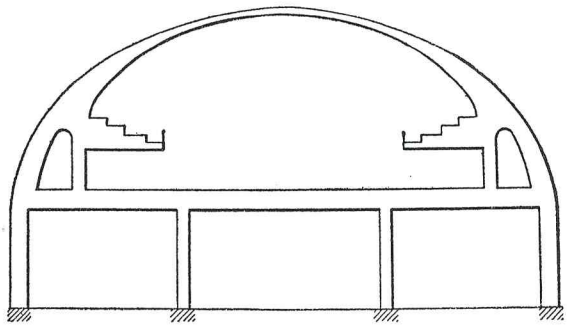

Fig. 41. Continuous Arch Frame.

FIG. 41

This figure suggests further the architectural possibilities of combinations of arches and girders. The analysis, for wind or gravity loads along lines indicated above, presents no special difficulties.

Combinations of Arches and Rectangular Frames. Where the abutments of the arch rest on rectangular frames, these may be treated by the formulas already explained. Thus in Fig. 42 we have at joint C, the arch, the column CD and the unsymmetrical ⌐ frame ABC.

The ⌐ frame may be treated as an unsymmetrical arch by the column analogy. Determine I_x, I_y, I_{xy} and the centroid. From these we determine the thrust stiffness and the thrust line for displacement, and, after the neutral point of joint C is located, the thrust line for distributed moment and the moment stiffness.

FIG. 42. Continuous Arch Frame.

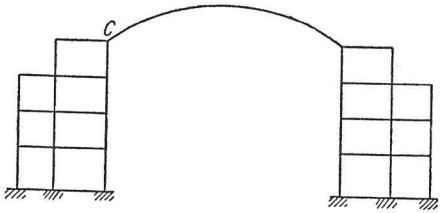

FIG. 43. Continuous Arch Frame.

A method to be preferred here is to determine the elastic properties of bent $ABCD$ as a whole and treat it as a single member in the analysis. In order to do so, proceed as follows:

(*a*) Apply unit rotation without displacement at C on frame $ABCD$ and find unbalanced H_a and M_a at C.

(*b*) Apply unit displacement without rotation at C on frame $ABCD$ and find unbalanced H_b and M_b at C.

We can now distribute unbalanced thrusts at C between arch and frame in proportion to their "thrust stiffness" (H_a) and find the resulting unbalanced moment (from M_a). Similarly distribute the unbalanced moment at C in proportion to "moment stiffness" (M_b) and find the resulting unbalanced thrust (from H_b). Repeat to convergence.

A similar problem is shown in Fig. 43.

INDEX

Numbers refer to pages.

A

Analogy
  Angle loads, 28
  Column analogy, 48
Analysis
  Methods of, 2
Angle Changes
  In beams, 28
  In trusses, 239
Angle Loads, 28, 31
Arbitrary Deformations
  Method of, 233
"Arch Action," 19
Arches
  Bents as, 197
  Combinations with girders, 335
  Hingeless
    Analysis of, 279
      Approximate, 300, 309
      By column analogy, 281
      Influence lines, 263, 264, 276, 277, 286, 291, 293, 294
      Moments and reactions, 281, 284, 288
      Pressure lines, 288
      Quantities to be computed, 283
      Typical, 284, 288, 292
    Continuous
      Analysis, 316
      Constants for, 319, 330
      Influence lines, 267, 268, 269, 326, 328
      Illustrative problems, 321, 324, 325, 327
      Neutral points, 317
      Proportions, 329
      Unsymmetrical, 329
    Design
      Economy, 306, 331
      Illustrative design, 313 (Figs. 23–28)
      Shape, 310
      Temperature effects, 311
Arches — Hingeless — Design
      Thickness, 308
      Type and form, 307
    Properties of, 303, 304
    Relative stresses in, 283
    Superstructure, 330
      Expansion joints in, 332
  Three-hinged, 22, 202, 264
  Two-hinged, 264, 265
Area-moments, *see* Moment Areas.

B

Battered Piers, 155
Beam Formula, 49, 51, 54
Bending Moments, *see* Moments.
Bents
  Analysis by
    Column analogy, 59, 70, 74, 75, 20[illegible]
    Moment distribution, 123, 124, 20[illegible]
    Pressure lines, 201
    Stress areas, 41
    Use of false ties, 211
  Arched, 197, 199
  Definition, 197
  Deflected, 19
  Influence lines for thrust, 80
  Types of, 199
Blunders in Analyzing Frames, 187
Brackets on Columns, 210
Bridges
  Arch, *see* Arches.
  Rigid frame, 211, 244
  Viaducts, 157
Buildings
  Arched, 197, 335
  High, 227
  Industrial, 199, 214
  Maxima in, 189

C

Cantilevers
  Continuous beams as, 17
  In moment distribution, 86

Carry-over Factor
Definition, 47, 83
Effect of joints, 187
Curves, 150–154
In beams of constant section, 62, 63
In beams of varying section, 67, 68, 69
In haunched beams, 129
Curves, 139–149
"Catenary Action," 19
Checks on Moment Distribution, 91, 119
Clear Span, 127, 185, 201
Column Analogy, 46, 204, 280
Application to analysis of
Arches, 280
Beams, 132
Bents, 204
Unsymmetrical structures, 51
Choice of moment curves, 56, 64
Hinges in, 60, 70
Illustrations of
Arches
Symmetrical, 291, 298
Unsymmetrical, 281
Beams
Haunched, 132
Of constant section
Carry-over factor, 64
Fixed-end moments, 61, 64
Stiffness, 62
Of varying section
Carry-over factor, 67, 68
Fixed-end moments, 65, 66
Stiffness, 67, 68
Bents
Symmetrical, 71, 74
Unsymmetrical, 75
Indeterminate force in, 52
Linear displacements in, 51
Picture of, 48
Signs in, 55
Tabulations in, 56, 57, 58
Uses of, 47, 60
Columns
In bents, 41
In "parallel," 217
In "series," 217
Moments in, 5, 163
Stepped, 220
With brackets, 210
Concentrated Loads, 157, 259
Constants of Deformation, 3, 27, 41, 43
Continuity, 1, 81
Effect of, girder loads, 191
Types of problems in, 6
Continuous Arched Bents, 213, 316
Continuous Arches, *see* Arches.
Continuous Frames, *see* Rigid Frames.
Continuous Viaducts, 132, 137, 157, 194–196
Corner Panel in Building Frame, 190

D

Deflected Structures, 9, 82
Bents, 20
Geometry of, 26, 28
Incorrect, 19
Inflection points, 16
Influence lines as, 79
Sketches of, 9
Statics of, 12
Deflections
Beams
By moment areas, 31, 32
By stress areas, 31, 36
Formulas for, 35, 36, 42
Referred to chord, 30
Referred to tangent, 29
Reinforced concrete, 44, 45
Building frames, 234
Comparative, 38
Continuous girders, 38
Girders simply supported, 37
Rigid-frame bridges, 245
Deformation Constants, 3, 27, 41, 43
Deformations, 3, 7
Beams, 26
Frames, 45
Trusses, 239
Design
Arches, *see* Arches, Design of.
Bents, 200
Continuous girders, 159, 192

E

Earthquake Stresses, 234
End-rotation Constant, 117, 135
Evans, L. T., 138
Expansion Joints, 332

F

Fixed-end Moments, 47
Beams
Constant section, 61, 62, 65
Formulas, 84, 85
Effect of joints, 152–154, 187
Haunched
Approximate, 127
Curves, 139–149
Influence lines for, *see* Influence Lines.
Varying section, 66, 67, 68
Fixed Points, 165
Flexibility, 218
Flexure
Formulas for, 49, 51
Geometry of, 26
Graphical analysis, 55, 130
Kern relations, 54
Neutral axis, 53
Frames, *see* Rigid Frames.
Freyssinet, Footnote reference, p. 307.

G

Geometrical Properties of Areas, 63
Geometry
Column analogy, 46
Deflections, 26, 28
Displacements, 51
Flexure, 26
Frames, 45
Influence lines, 76
Sidesway, 44
Useful data of, 63
Girder-arch Frames, *see* Arches.
Graphical Arithmetic, 271
Graphics
Column analogy, 273
Continuous frames, 193–196
Flexure, 55, 130
Influence lines
Arches, 276, 277
Beams, 275
Kern, 272
Products of inertia, 270

H

Haunched Beams
Analyzed by column analogy, 132
Approximate properties, 127
Haunched Beams
Curves for, 139–149
Graphical analyses, 132
Haunches, 126, 138
Hinges, 60, 70, 264
Hookes' Law, 2, 28, 78

I

Indeterminate Force, *see* Column Analogy.
Industrial Buildings, *see* Buildings.
Inflection Points, 16
In high buildings, wind, 221
Influence Lines, 247
As deflected structures, 79
Combined, 249
Construction of
Arches
Continuous, 267
Fixed at ends, 253, 263
Beams
Continuous, 250, 251, 259
Fixed at ends, 139–149, 254
Haunched, 257
Statically determinate, 248
Frames, 259
Graphical construction of
Arches
Moments, 277
Thrusts, 276
Beams, 275
Use of in
Arches, 289
Continuous frames, 159

J

Joints, 152, 154, 187

K

Kern, 54, 272

L

Limitations on Precise Analysis, 4, 5, 189, 203

M

Maximum Moments, Shears and Reactions
Columns, 163

Maximum Moments, Shears and Reactions
Curves of, construction, 164, 167
Elementary procedure, 156
For concentrated loads, 157, 257
For uniform loads, 156, 257
Illustrations
Moments, 167, 179, 180, 181, 183
Shears, 167, 178, 179, 183, 184
Mezzanine Floors, 226
Mill Buildings, *see* Buildings.
Modulus of Elasticity, 4, 313
Moment Areas, 30, 32, 36, 91
Moment Curves, 14, 16; *see also* Maximum Moments, etc.
Moment Distribution
Approximate methods, 167
Degree of approximation, 171
Illustrations, 173, 174, 176, 180, 181, 182
Modified arrangement, 176
Direct method
Abbreviated, 102, 230, 237, 243
Arrangement, 95
At separate joints, 104
Cantilevers in, 86
Check on
General, 119
Prismatic beams, 91
Columns in, 90, 101
Free-end members in, 98
Illustrative problems, 90, 92, 99
Signs, 92, 95
Summary, 97
Graphical, 194–196
In bents, 207
Indirect method
Correction for sidesway, 107, 109
Fixed-end moments by, 105
Nature of conception, 81
Types of frames solved by, 114
Moments of Inertia, 4, 52
Müller-Breslau's Principle, 79, 247, 274, 326

N

Neutral Point, 318

O

Order of Study, 7

P

Physical Constants, *see* Constants of Deformation.
Plastic Flow, 3
Pressure Lines, 23, 25, 201, 289, 295
Pressure Line Theorem, 289
Products of Inertia, 52, 270, 273

R

Reciprocal Theorems, 77
Rib-shortening
Arches, 285, 294, 295, 311
Bents, 46
Building frames, 235
Rigid-frame Bridges, 211, 244
Rigid Frames, 197
Analysis
Column analogy, 204
Moment distribution, 207
Pressure lines, 201
Use of false ties, 211
Wind stresses, 214

S

Secondary Effects from Wind, in Buildings, 235
Secondary Stresses
Superstructures of arches, 332
Trusses, 238
Effect of proportions, 240
Effect on primary stresses, 242
Illustrative computation, 243
Settlements, 38, 115, 244
Shear Adjustment, 227
Shear Distribution
High buildings, 220
Industrial buildings, 214
Shearing Distortions, Effect on Analyses, 46
Shears, 15; *see also* Maximum Moments, Shears, etc.
Sidesway, 107
Geometry of, 44
In buildings and bents, 209
Statics of, 24
Signs
Column analogy, 55
Moment distribution, 92, 95
Sih, T. S., 137

Slope-deflection, 93
Slopes
By moment areas, 31, 32
By stress areas, 31, 36
Formulas for, 35, 36, 42
Referred to chord, 30
Referred to tangent, 29
Statics
Bents and arches, 20
Principle of, 12
Sidesway, 24
Stiffness, 47, 83
Beams
Constant section, 62, 63
Free at one end, 98
Haunched, 129
Curves, 139–149
Varying section, 67, 68, 69
Effect of joints, 187, 201
"Moment stiffness," 316
"Thrust stiffness," 316
Stress Areas, 31, 36
Superstructure of Arches, 330

T

Tabulations in Column Analogy, 56, 57, 58
Temperature Effects
Continuous arches, 329
Temperature Effects
Fixed arches, 312
Timby, E. K., 333
Time Yield, 3, 4 (footnote), 312
Torsion, 117, 185, 191
Building frames, 235
Trusses, 238

U

Uncertainties, *see also* Limitations of Analyses.
Analyses of bents, 203
Column moments, 5
Physical constants, 4

V

Viaducts, 132, 137, 157
Vibration of Buildings, 223
Vierendeel, 236
Virtual Work, 77, 239

W

Whitney, Chas. S., 300
Wind Bracing, 223
Wind Stresses
Bents, 204
High buildings, 220
Industrial buildings, 214